DRG. No. D01483

DO NOT SCALE.

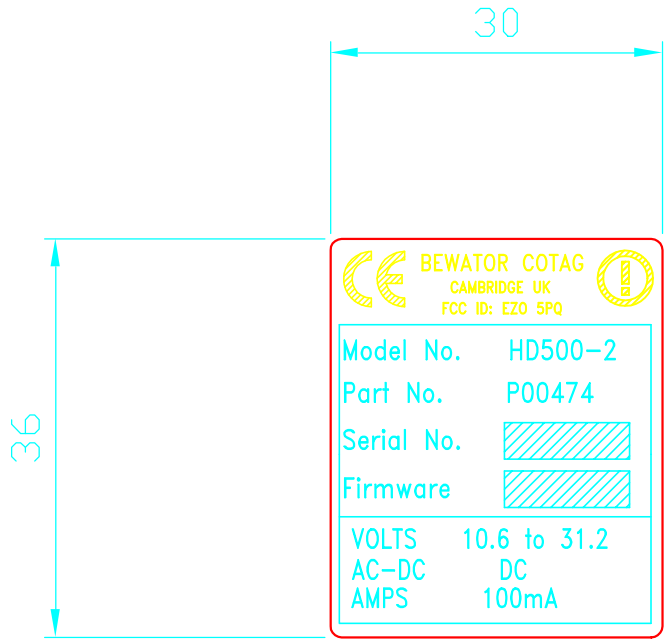

PRINTING NOTES

1. ALL TEXT AND GRAPHICS TO BE BLACK ON A WHITE BACKGROUND
2. PRINT ONTO A STANDARD SELF-ADHESIVE LABEL PART No. H258 USING A BRADY BP4000 PRINTER AND SOFTWARE
3. SEE D00600 FOR CURRENT FIRMWARE REVISION.
4. USE FILE REFERENCE \1483.

Iss.	Date.	Revision.	Init.
6	27-11-03	CN001835	MDS
5	5-8-03	CN001823	MDS
4	1-4-03	CN001810	mds
3	3-2-03	FIRMWARE REV. ADDED	MDS
2	28-10-02	CONN DETAILS REMOVED	MDS

A4

Drawn:	MDS	20-6-02
Checked:		
Authorised:	KOF	11-2-03

Bewator Cotag
A division of Bewator Group Ltd.
Mercers Row, Cambridge. CB5 8EX.
Tel: 01223 321535
Fax: 01223 366799

All rights reserved. Reproduction or issue to third parties in any form whatever is not permitted without written authority from the proprietors. ©BEWATOR GROUP LTD.

Used on				
	DL00474			

Third Angle Projection

Scale: N.T.S.

All dimensions in MILLIMETRES Unless otherwise stated

Tolerance: – Unless otherwise stated

Material: H258

Finish: AS SHOWN

Title: PRODUCT LABEL HD500-2

Drawing Number: D01483

Sht. 1 of: 1