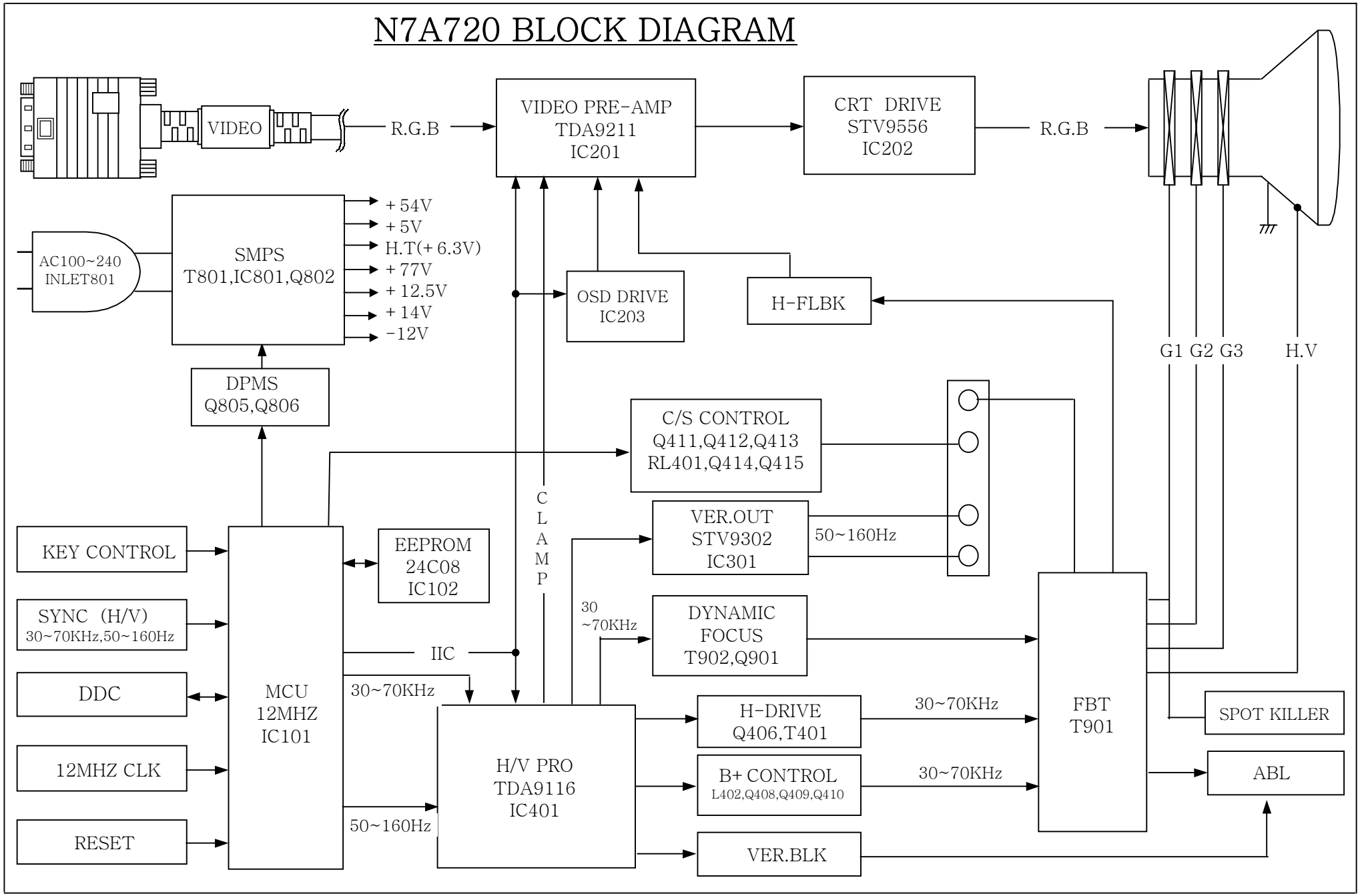N7A720 BLOCK DIAGRAM