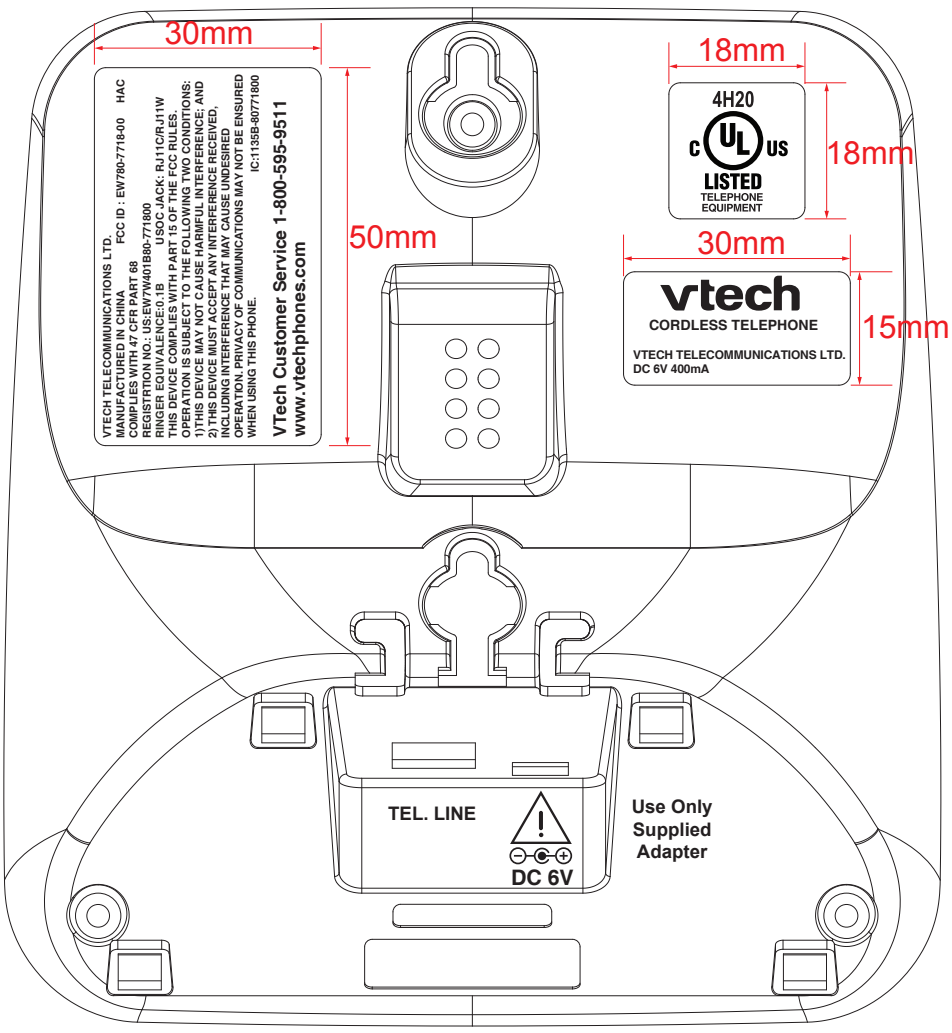
30mm
50mm
18mm
18mm
4H20
c UL us
LISTED
TELEPHONE
EQUIPMENT
30mm
15mm
vtech
CORDLESS TELEPHONE
VTECH TELECOMMUNICATIONS LTD.
DC 6V 400mA
VTECH TELECOMMUNICATIONS LTD.
MANUFACTURED IN CHINA
FCC ID : EW780-7718-00 HAC
COMPLIES WITH 47 CFR PART 68
REGISTRTION NO.: US:EW7W401B80-771800
RINGER EQUIVALENCE:0.1B
USOC JACK: RJ11C/RJ11W
THIS DEVICE COMPLIES WITH PART 15 OF THE FCC RULES.
OPERATION IS SUBJECT TO THE FOLLOWING TWO CONDITIONS:
1)THIS DEVICE MAY NOT CAUSE HARMFUL INTERFERENCE; AND
2) THIS DEVICE MUST ACCEPT ANY INTERFERENCE RECEIVED,
INCLUDING INTERFERENCE THAT MAY CAUSE UNDESIRED
OPERATION. PRIVACY OF COMMUNICATIONS MAY NOT BE ENSURED
WHEN USING THIS PHONE.
IC:1135B-80771800
VTech Customer Service 1-800-595-9511
www.vtechphones.com
TEL. LINE
DC 6V
Use Only
Supplied
Adapter

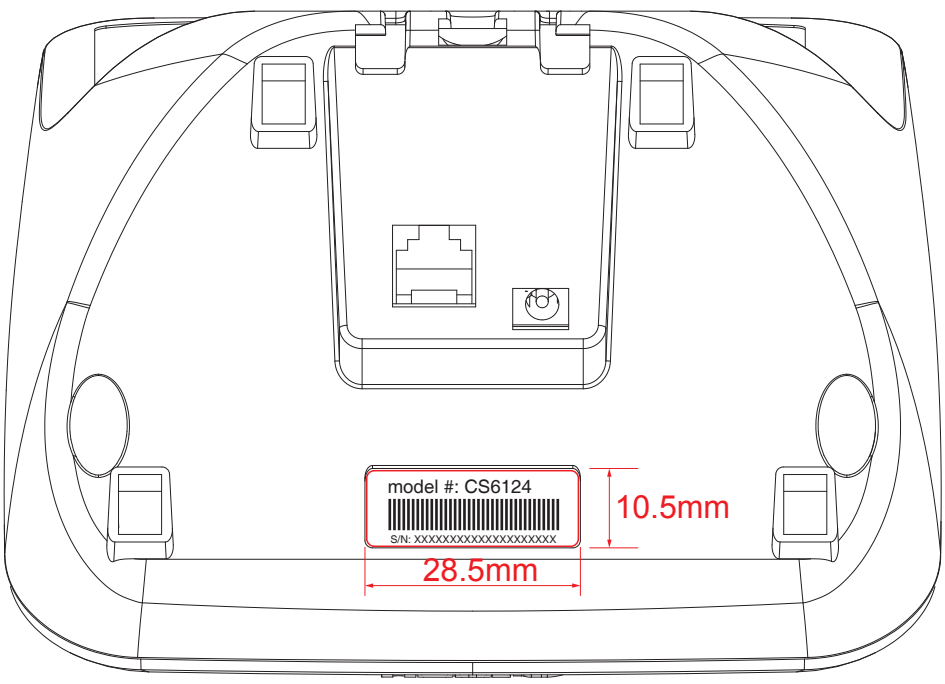
model #: CS6124
S/N: XXXXXXXXXXXXXXXXXXXX
10.5mm
28.5mm
SN Label
28X10mm
model #: CS6124
S/N: XXXXXXXXXXXXXXXXXXXX
model #: CS6124-2
S/N: XXXXXXXXXXXXXXXXXXXX