Model: CS6114-2

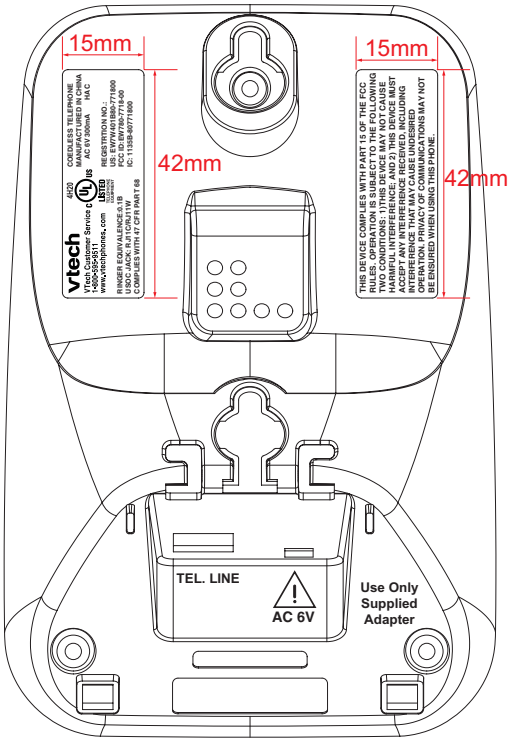

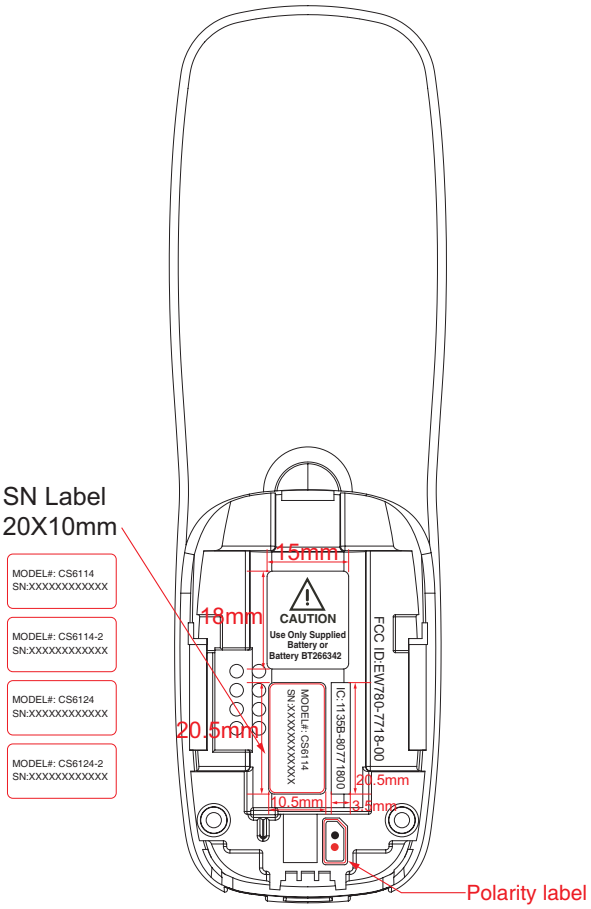

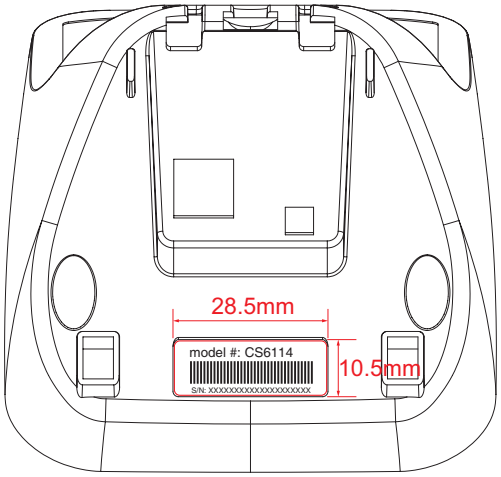

SN Label
28X10mm

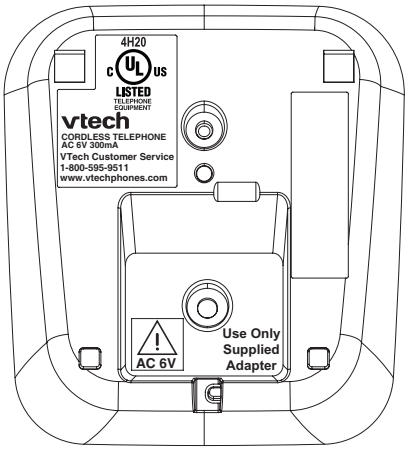

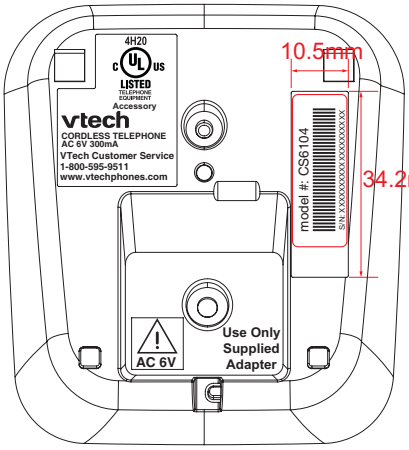

SN Label
28X10mm