CL84x00 Engraving draft file

1.CL84100(1BS + 1CORDED HS + 1 CORDLESS HS + 1CH)
2.CL84200(1BS + 1CORDED HS + 2 CORDLESS HS + 2CH)

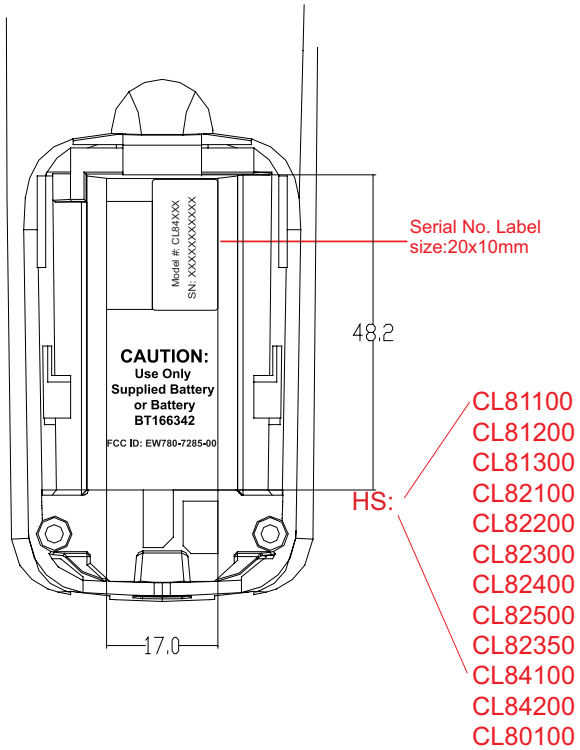

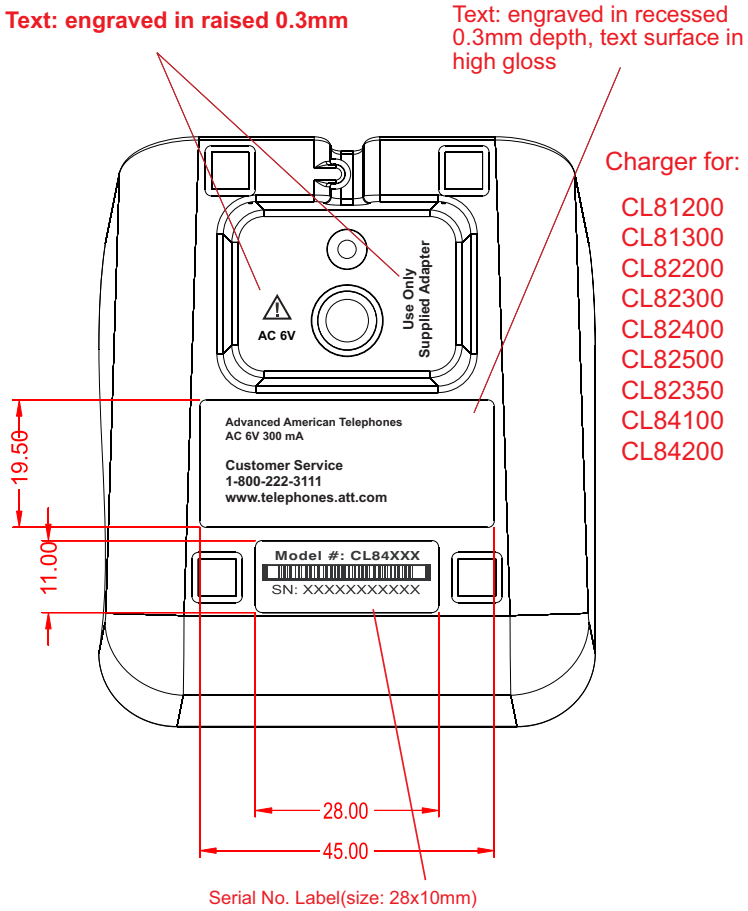

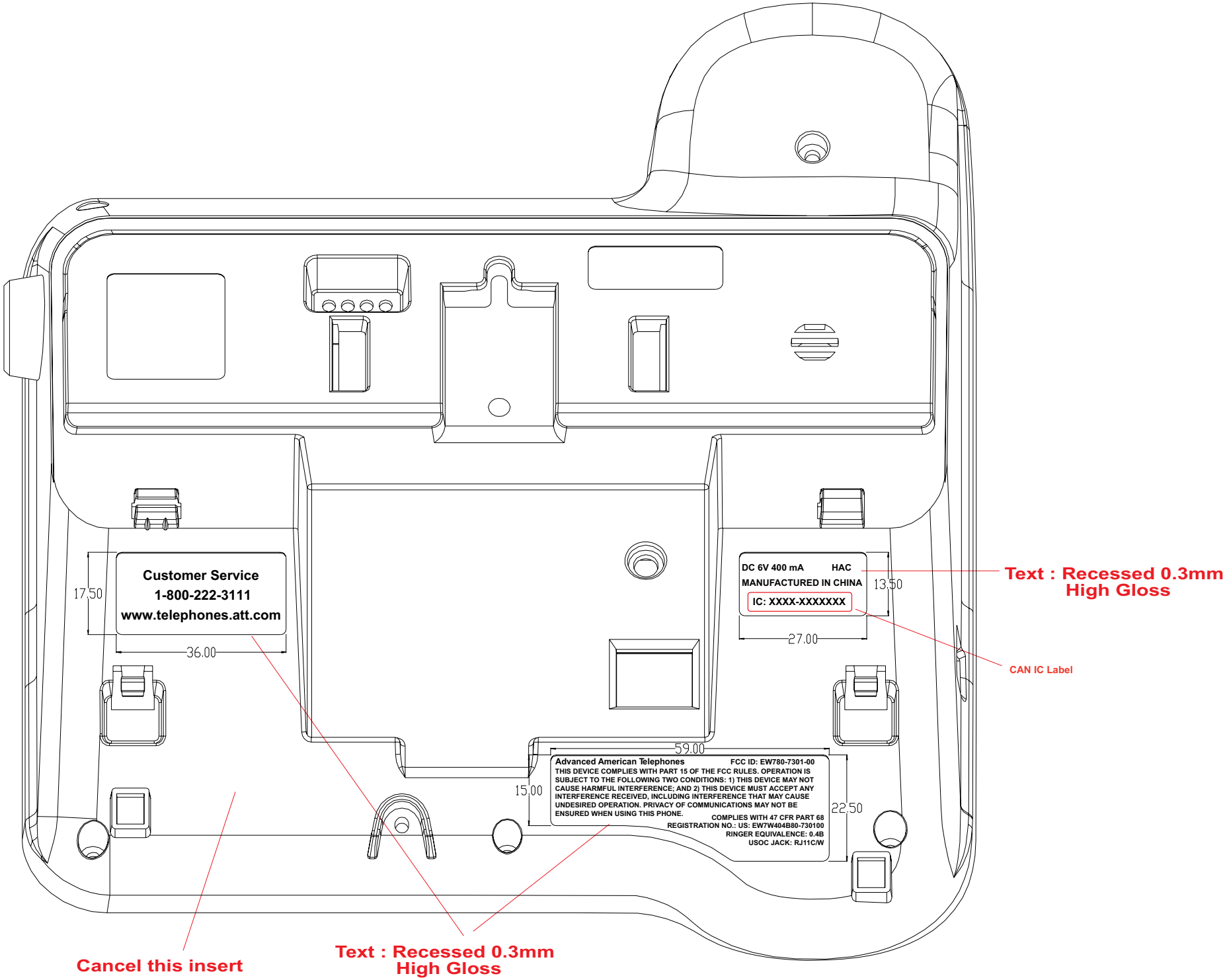
Customer Service
1-800-222-3111
www.telephones.att.com
17.50
36.00
DC 6V 400 mA HAC
MANUFACTURED IN CHINA
IC: XXXX-XXXXXXX
13.50
27.00
59.00
15.00
22.50
Advanced American Telephones
FCC ID: EW780-7301-00
THIS DEVICE COMPLIES WITH PART 15 OF THE FCC RULES. OPERATION IS SUBJECT TO THE FOLLOWING TWO CONDITIONS: 1) THIS DEVICE MAY NOT CAUSE HARMFUL INTERFERENCE; AND 2) THIS DEVICE MUST ACCEPT ANY INTERFERENCE RECEIVED, INCLUDING INTERFERENCE THAT MAY CAUSE UNDESIRED OPERATION. PRIVACY OF COMMUNICATIONS MAY NOT BE ENSURED WHEN USING THIS PHONE.
COMPLIES WITH 47 CFR PART 68
REGISTRATION NO.: US: EW7W404B80-730100
RINGER EQUIVALENCE: 0.4B
USOC JACK: RJ11C/W
Text : Recessed 0.3mm
High Gloss
CAN IC Label
Cancel this insert
Text : Recessed 0.3mm
High Gloss