TL88x02 Engraving
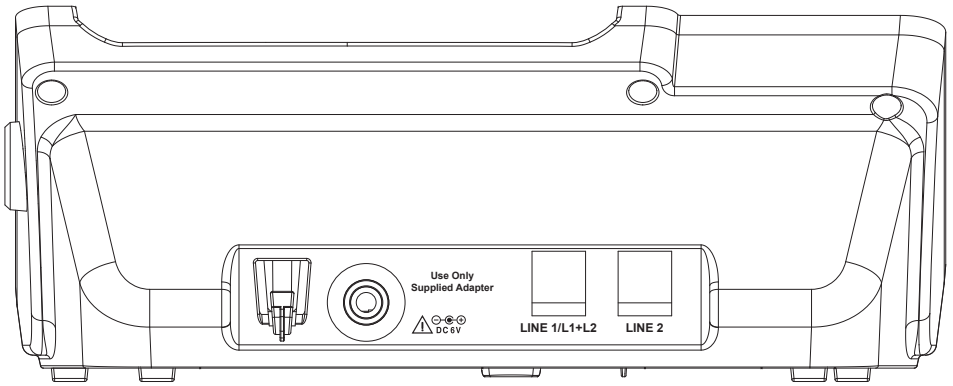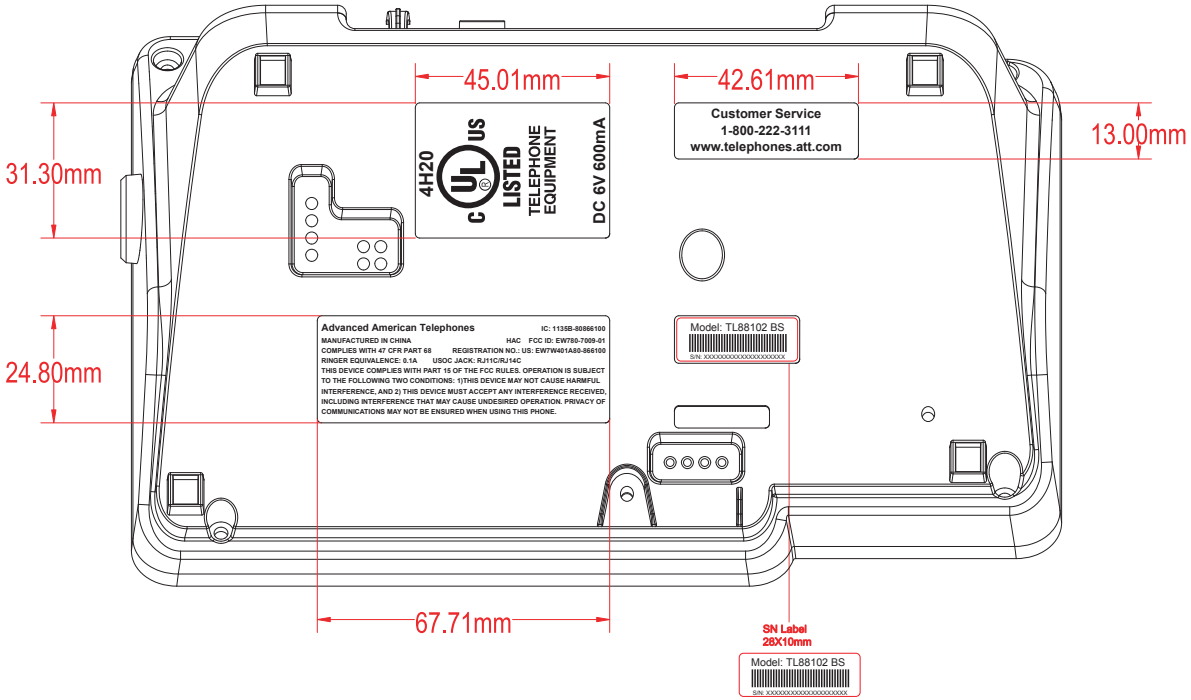
BS Engraving