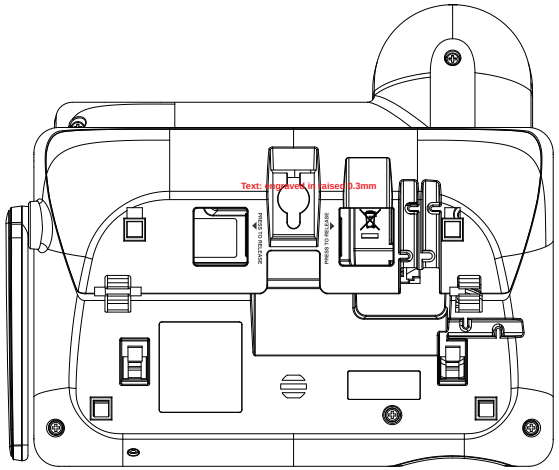
Text: engraved in raised 0.3mm
PUSH TO RELEASE
SWIPE TO OPEN

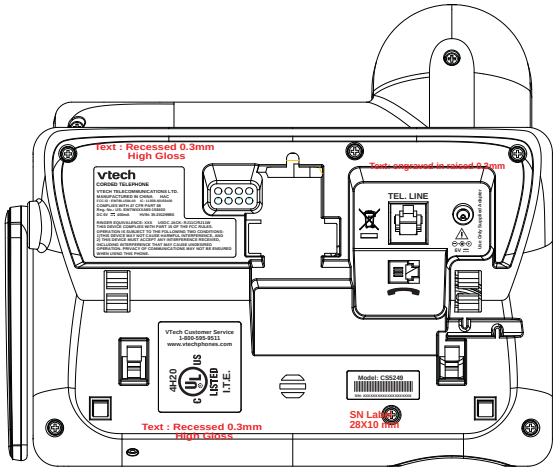
Text : Recessed 0.3mm
High Gloss
vtech
CORDED TELEPHONE
VTECH TELECOMMUNICATIONS LTD.
MANUFACTURER IN CHINA FWC
FCC ID : ENFWL0361-01 IC: 1-0355-0361A01
Model No. : CS5249 Serial No. : XXXXXXXXXXXXXXXX
Prog. No. : LIS : ENFWL0361A01-1361A01
DC 5V 200mA IHVN: 35-3322R001
RINGER EQUIVALENCE: 0.0 USOC JACK: RJ11C/RJ14C
THIS DEVICE COMPLIES WITH PART 15 OF THE FCC RULES.
OPERATION IS SUBJECT TO THE FOLLOWING TWO CONDITIONS:
(1)THIS DEVICE MAY NOT CAUSE HARMFUL INTERFERENCE, AND
(2)THIS DEVICE MUST ACCEPT ANY INTERFERENCE RECEIVED,
INCLUDING INTERFERENCE THAT MAY CAUSE UNDESIRED
OPERATION. PRIVACY OF COMMUNICATIONS MAY NOT BE ENSURED
WHEN USING THIS PHONE.
TEL. LINE
Use Only Supplied Adapter
5V
VTech Customer Service
1-800-595-9511
www.vtechphones.com
4H20
LISTED
I.T.E.
Model: CS5249
Text : Recessed 0.3mm
High Gloss
SN Label
28X10 mm