AUVIO®
Cat. No.: 4000453
PBT200
Bluetooth Speaker
BC
07A13
Power Input: 5V ⎓ 500mA
FCC ID: ESXPBT200
This device complies with Part 15 of the FCC Rules. Operation is subject to the following two conditions:(1)This device may not cause harmful interference, and (2)this device must accept any interference received, including interference that may cause undesired operation.
Custom Manufactured in China for Ignition L.P.
3102 Maple Ave, Suite 450, Dallas, TX 75201

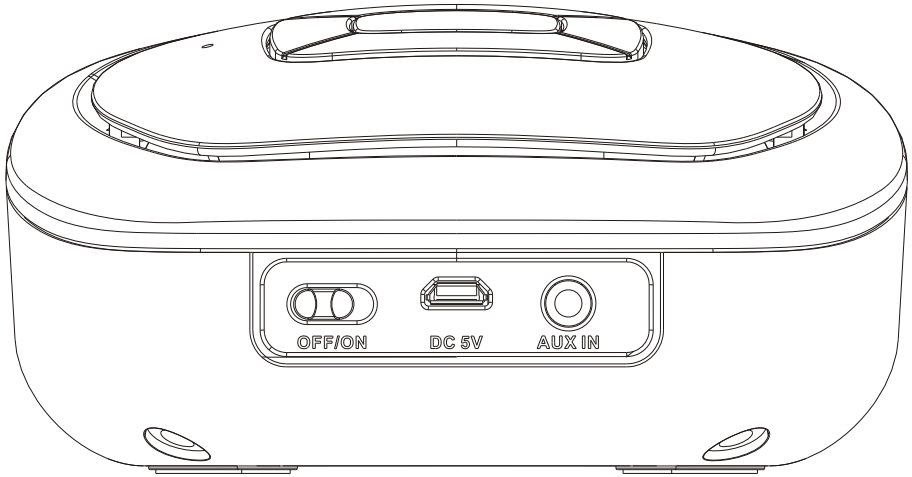
OFF/ON
DC 5V
AUX IN

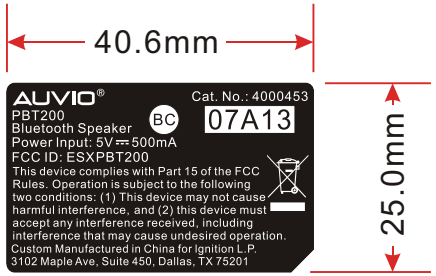
40.6mm
25.0mm
AUVIO®
Cat. No.: 4000453
PBT200
Bluetooth Speaker
BC
07A13
Power Input: 5V ⎓ 500mA
FCC ID: ESXPBT200
This device complies with Part 15 of the FCC Rules. Operation is subject to the following two conditions: (1) This device may not cause harmful interference, and (2) this device must accept any interference received, including interference that may cause undesired operation.
Custom Manufactured in China for Ignition L.P.
3102 Maple Ave, Suite 450, Dallas, TX 75201