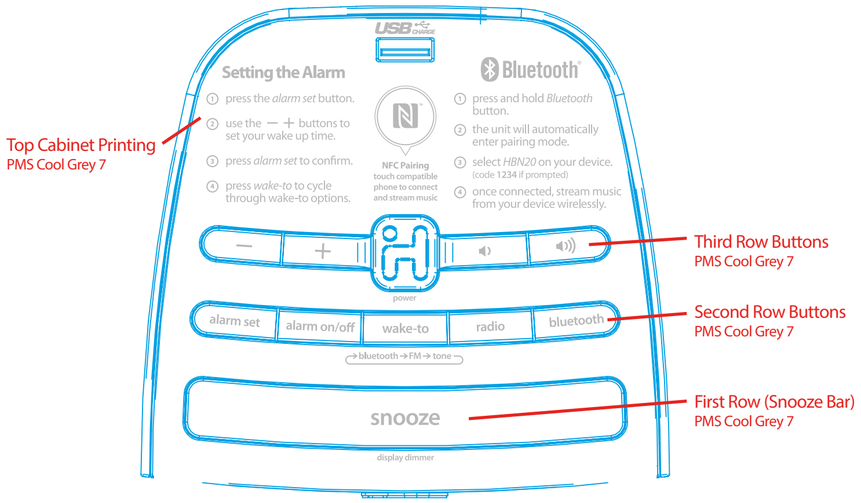

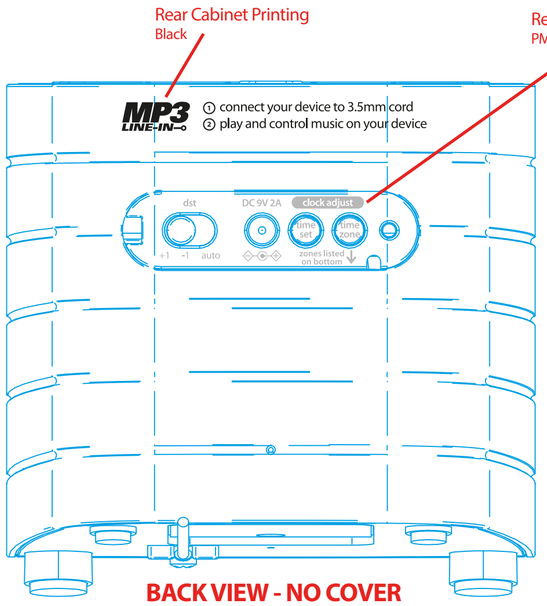

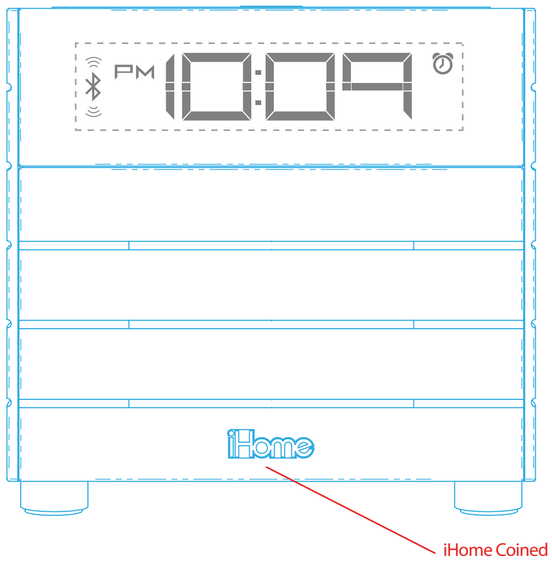

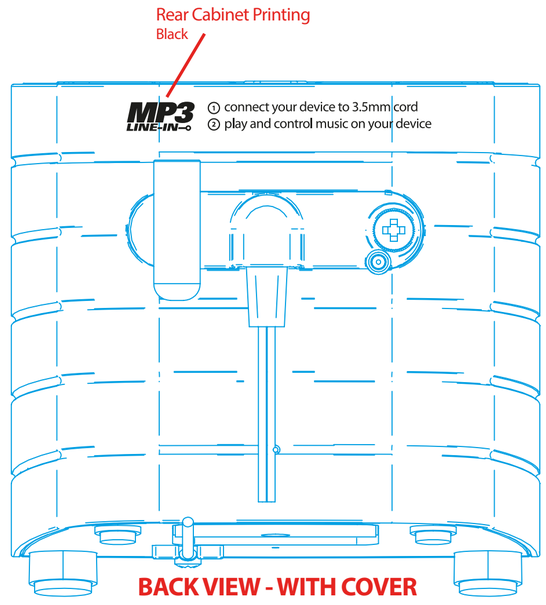

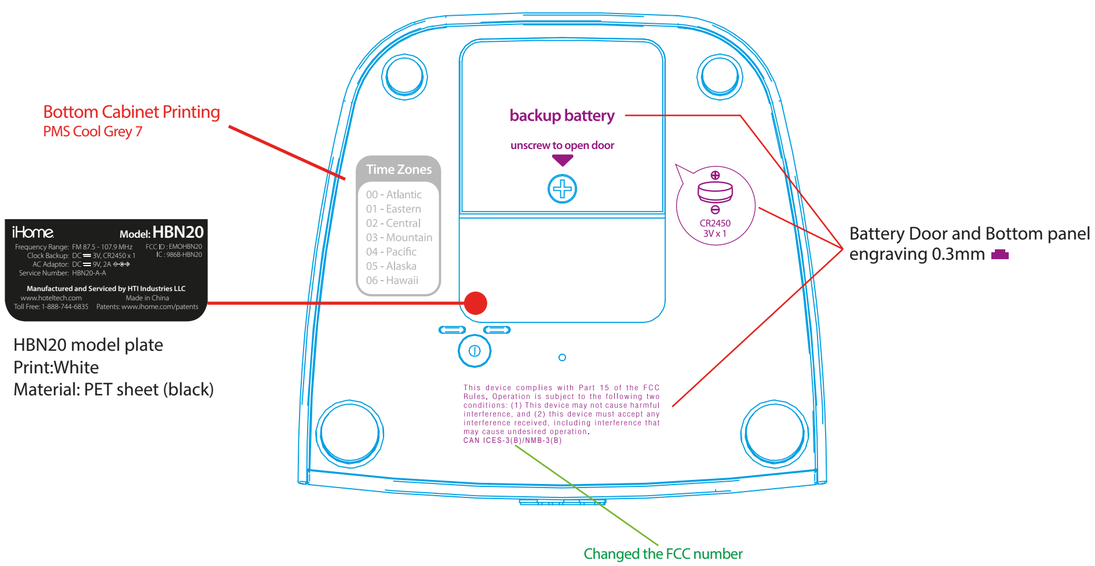

HBN20B GAW

09.09.2013 version 6