MIDLINE RECEIVER (POWERBOARD).sch-1 - Thu Jun 01 11:09:45 2006

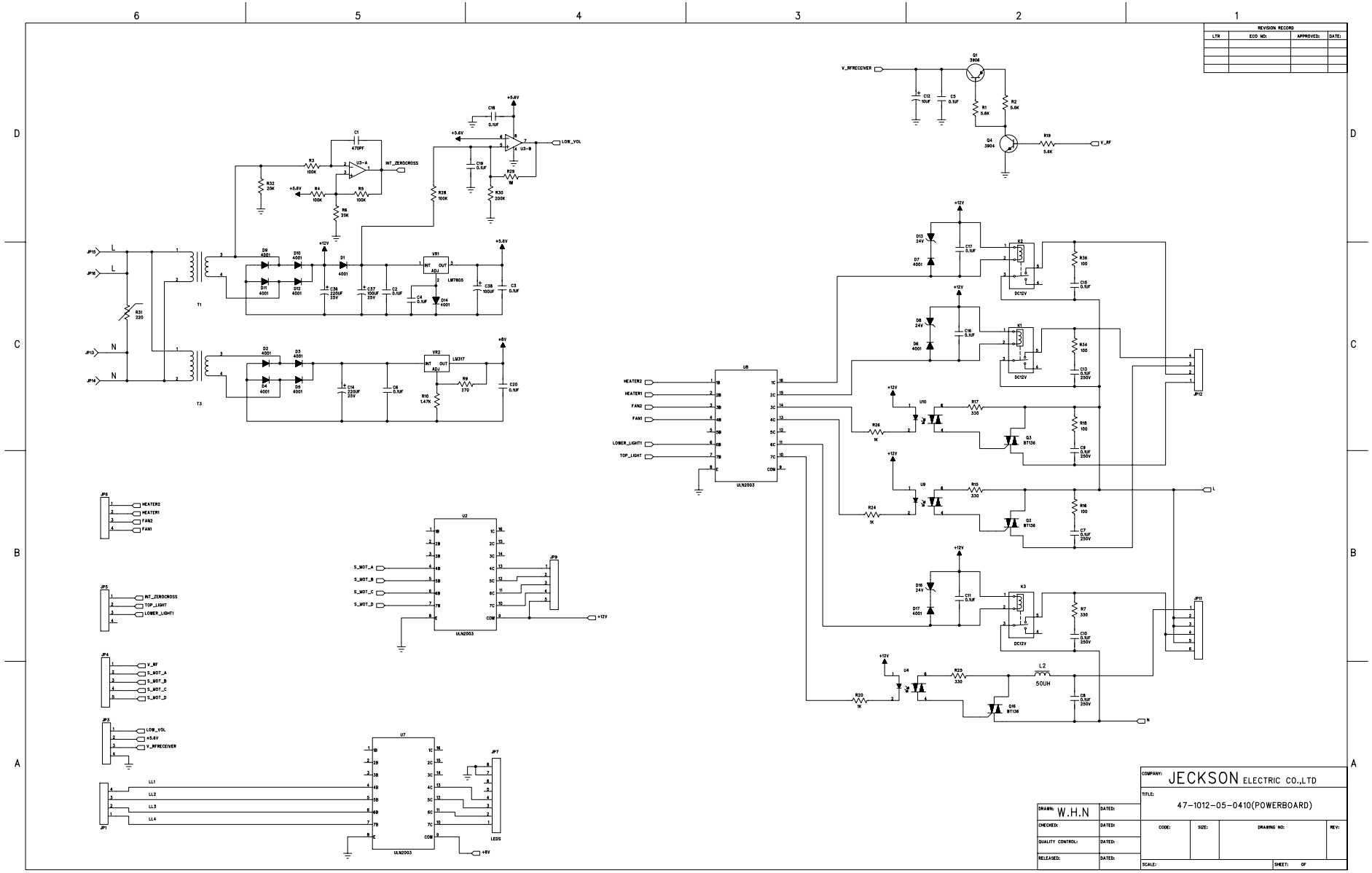

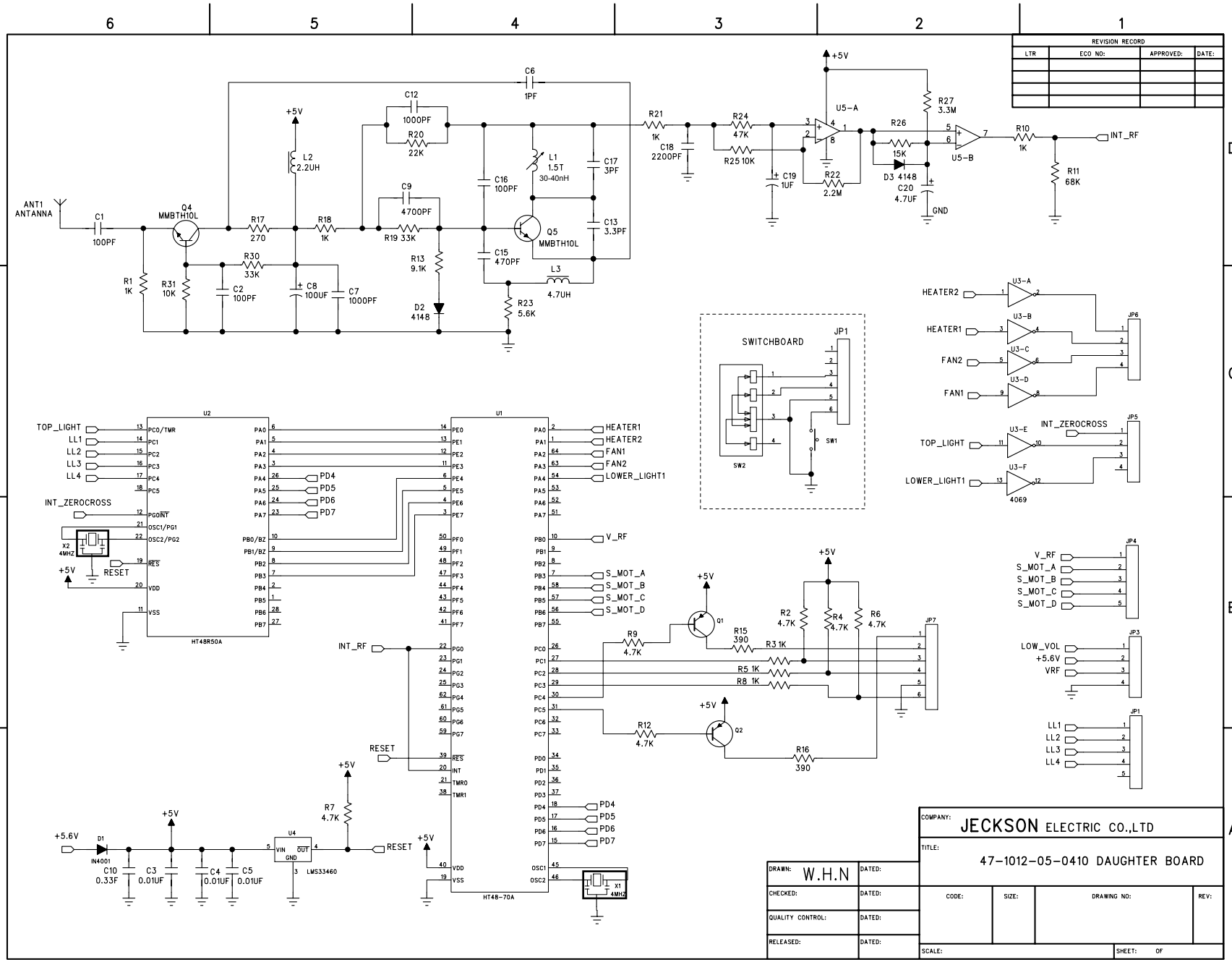
REVISION RECORD
LTR
ECO NO:
APPROVED:
DATE:
ANT1
ANTANNA
C1
100PF
Q4
MMBTH10L
R1
1K
R31
10K
R30
33K
C2
100PF
R17
270
R18
1K
L2
2.2UH
C8
100UF
C7
1000PF
C6
1PF
C12
1000PF
R20
22K
C9
4700PF
R19 33K
R13
9.1K
D2
4148
C16
100PF
C15
470PF
L1
1.5T
30-40nH
Q5
MMBTH10L
C17
3PF
C13
3.3PF
L3
4.7UH
R23
5.6K
R21
1K
C18
2200PF
R24
47K
R25 10K
C19
1UF
U5-A
R22
2.2M
R26
15K
D3 4148
C20
4.7UF
GND
R27
3.3M
U5-B
R10
1K
R11
68K
INT_RF
+5V
U2
HT48R50A
TOP_LIGHT
LL1
LL2
LL3
LL4
INT_ZEROCROSS
X2
4MHZ
RESET
PD4
PD5
PD6
PD7
U1
HT48-70A
HEATER1
HEATER2
FAN1
FAN2
LOWER_LIGHT1
V_RF
S_MOT_A
S_MOT_B
S_MOT_C
S_MOT_D
X1
4MHZ
SWITCHBOARD
JP1
SW1
SW2
U3-A
U3-B
U3-C
U3-D
U3-E
U3-F
4069
JP6
JP5
JP4
JP3
LOW_VOL
+5.6V
VRF
R9
4.7K
Q1
R15
390
R3 1K
R5 1K
R8 1K
R2
4.7K
R4
4.7K
R6
4.7K
JP7
R12
4.7K
Q2
R16
390
R7
4.7K
+5.6V
D1
IN4001
C10
0.33F
C3
0.01UF
C4
0.01UF
C5
0.01UF
U4
LMS33460
VIN
OUT
GND
DRAWN: W.H.N
DATED:
CHECKED:
QUALITY CONTROL:
RELEASED:
COMPANY: JECKSON ELECTRIC CO.,LTD
TITLE: 47-1012-05-0410 DAUGHTER BOARD
CODE:
SIZE:
DRAWING NO:
REV:
SCALE:
SHEET: OF