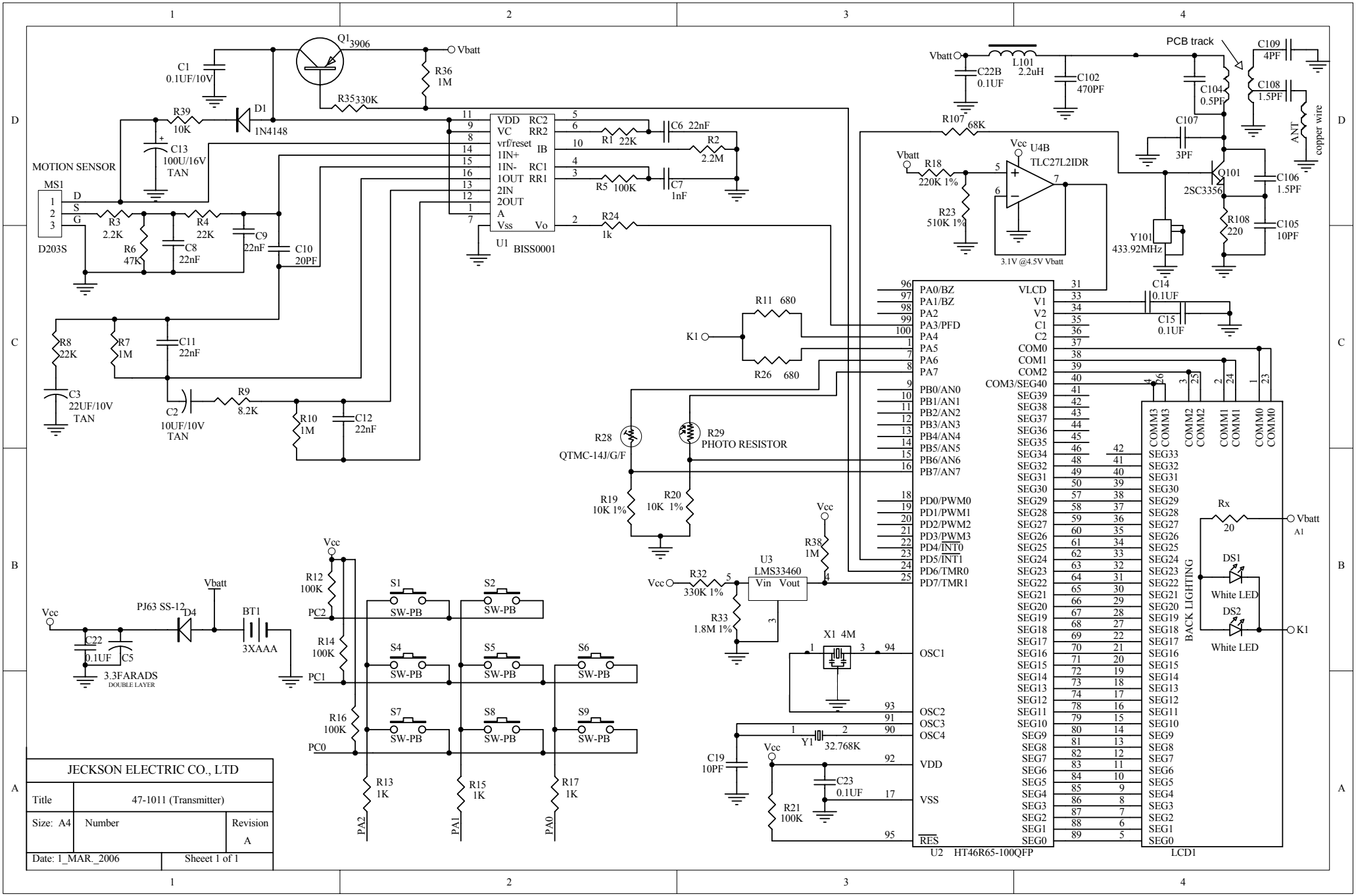
Q1 3906
Vbatt
C1 0.1UF/10V
R36 1M
R35 330K
R39 10K
D1 1N4148
C13 100U/16V TAN
MOTION SENSOR
MS1
D203S
R3 2.2K
R4 22K
R6 47K
C8 22nF
C9 22nF
C10 20PF
VDD RC2
VC RR2
vrf/reset IB
1IN+
1IN- RC1
1OUT RR1
2IN
2OUT
A
Vss Vo
U1 BISS0001
R1 22K
C6 22nF
R2 2.2M
R5 100K
C7 1nF
R24 1k
R8 22K
R7 1M
C11 22nF
C3 22UF/10V TAN
C2 10UF/10V TAN
R9 8.2K
R10 1M
C12 22nF
K1
R11 680
R26 680
R28 QTMC-14J/G/F
R29 PHOTO RESISTOR
R19 10K 1%
R20 10K 1%
Vcc
R38 1M
U3 LMS33460
Vin Vout
R32 330K 1%
R33 1.8M 1%
X1 4M
Y1 32.768K
C19 10PF
C23 0.1UF
R21 100K
PA0/BZ
PA1/BZ
PA2
PA3/PFD
PA4
PA5
PA6
PA7
PB0/AN0
PB1/AN1
PB2/AN2
PB3/AN3
PB4/AN4
PB5/AN5
PB6/AN6
PB7/AN7
PD0/PWM0
PD1/PWM1
PD2/PWM2
PD3/PWM3
PD4/INT0
PD5/INT1
PD6/TMR0
PD7/TMR1
OSC1
OSC2
OSC3
OSC4
VDD
VSS
RES
U2 HT46R65-100QFP
VLCD
V1
V2
C1
C2
COM0
COM1
COM2
COM3/SEG40
SEG39
SEG38
SEG37
SEG36
SEG35
SEG34
SEG33
SEG32
SEG31
SEG30
SEG29
SEG28
SEG27
SEG26
SEG25
SEG24
SEG23
SEG22
SEG21
SEG20
SEG19
SEG18
SEG17
SEG16
SEG15
SEG14
SEG13
SEG12
SEG11
SEG10
SEG9
SEG8
SEG7
SEG6
SEG5
SEG4
SEG3
SEG2
SEG1
SEG0
COMM3 COMM3
COMM2 COMM2
COMM1 COMM1
COMM0 COMM0
LCD1
BACK LIGHTING
Rx 20
DS1 White LED
DS2 White LED
A1
K1
PJ63 SS-12 D4
BT1 3XAAA
C22 0.1UF
C5 3.3FARADS DOUBLE LAYER
R12 100K
R14 100K
R16 100K
PC2
PC1
PC0
S1 SW-PB
S2 SW-PB
S4 SW-PB
S5 SW-PB
S6 SW-PB
S7 SW-PB
S8 SW-PB
S9 SW-PB
R13 1K
R15 1K
R17 1K
PA2
PA1
PA0
L101 2.2uH
C22B 0.1UF
C102 470PF
PCB track
C109 4PF
C108 1.5PF
ANT copper wire
C104 0.5PF
C107 3PF
R107 68K
U4B TLC27L2IDR
R18 220K 1%
R23 510K 1%
3.1V @4.5V Vbatt
Q101 2SC3356
C106 1.5PF
R108 220
C105 10PF
Y101 433.92MHz
C14 0.1UF
C15 0.1UF
JECKSON ELECTRIC CO., LTD
Title 47-1011 (Transmitter)
Size: A4
Number
Revision A
Date: 1_MAR._2006
Sheeet 1 of 1