FCC ID: ELVATIC Label & Label Location

REVISIONS				
REV.	ACC.	DESCRIPTION	DRN.	DATE
1		modify engraved	victor	6/4/09
2		REMOVE SCREW	victor	7/17/09

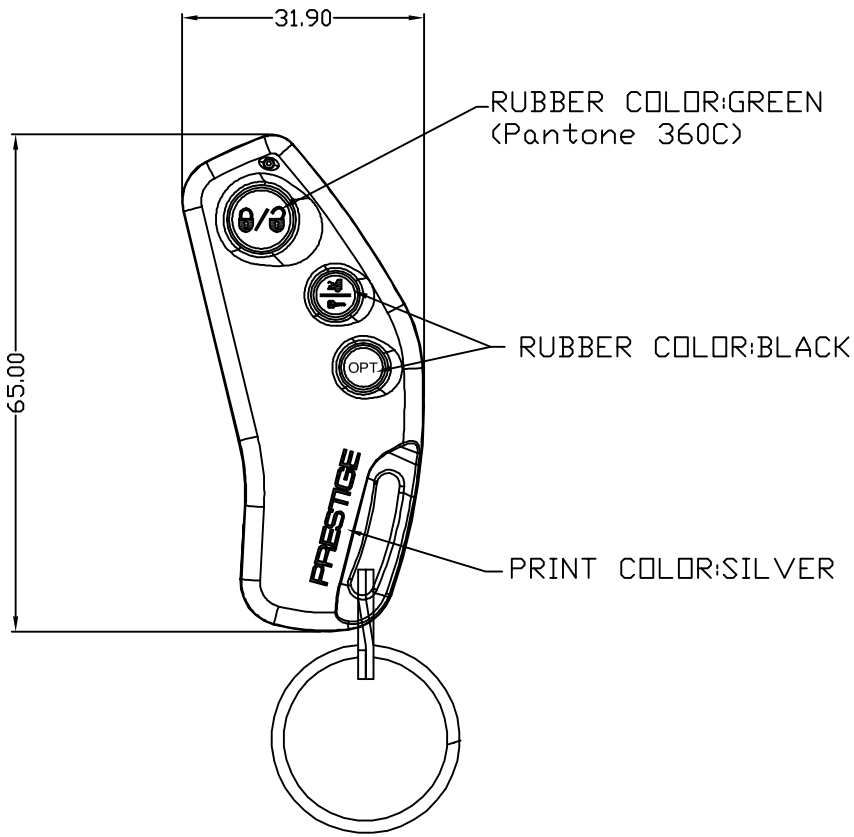

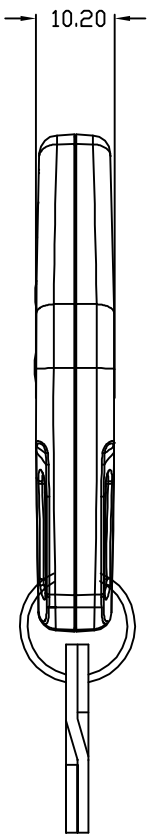

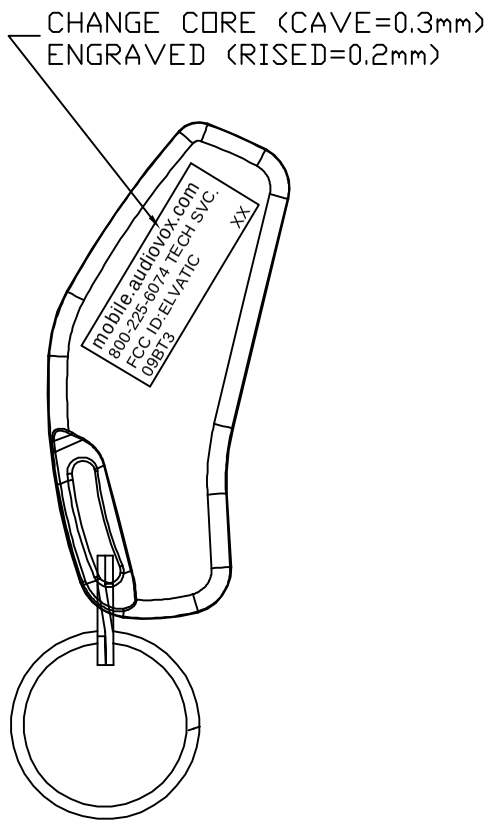

TX COLOR:BLACK

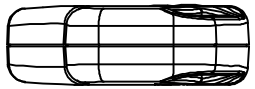

NO.	PART	P/N
①	CASE	IAXG20A2
②	RUBBER PAD	NKXG2000
③	BAT CLIP	MCD0000G
④	SCREW	N/A ~~MTF02008~~ 2
⑤	BATTERY	CR2032*1
⑥	KEYCHAIN	MA21G000

BODY MATERIAL : ABS+PC

1. **Texture is same as** MT-11010
2. Radious will be 0.2 if not specified.
3. Battery : CR2032*1

*Tolerance please refer specification of tolerance limits 'c'

INJECT TOLERANCE SPEC.

GRADE / DIMENSION	A ±	B ±	C ±
UNDER 6	0.08	0.16	0.30
6~30	0.10	0.20	0.40
30~120	0.20	0.40	0.80
120~300	0.40	0.80	2.00

SCALE: 1:1	UNIT: M/M	DRN BY JAMES	DATE 3/9/09	NUTEK CORPORATION
MATERIAL		CHK BY YYS		TITLE AXC 09BT3
FINISH		APPD BY VICTOR		SIZE A4 / DEPT / DRAWING NO 9610460-1 / REV 2
CODE		SHEET	OF	