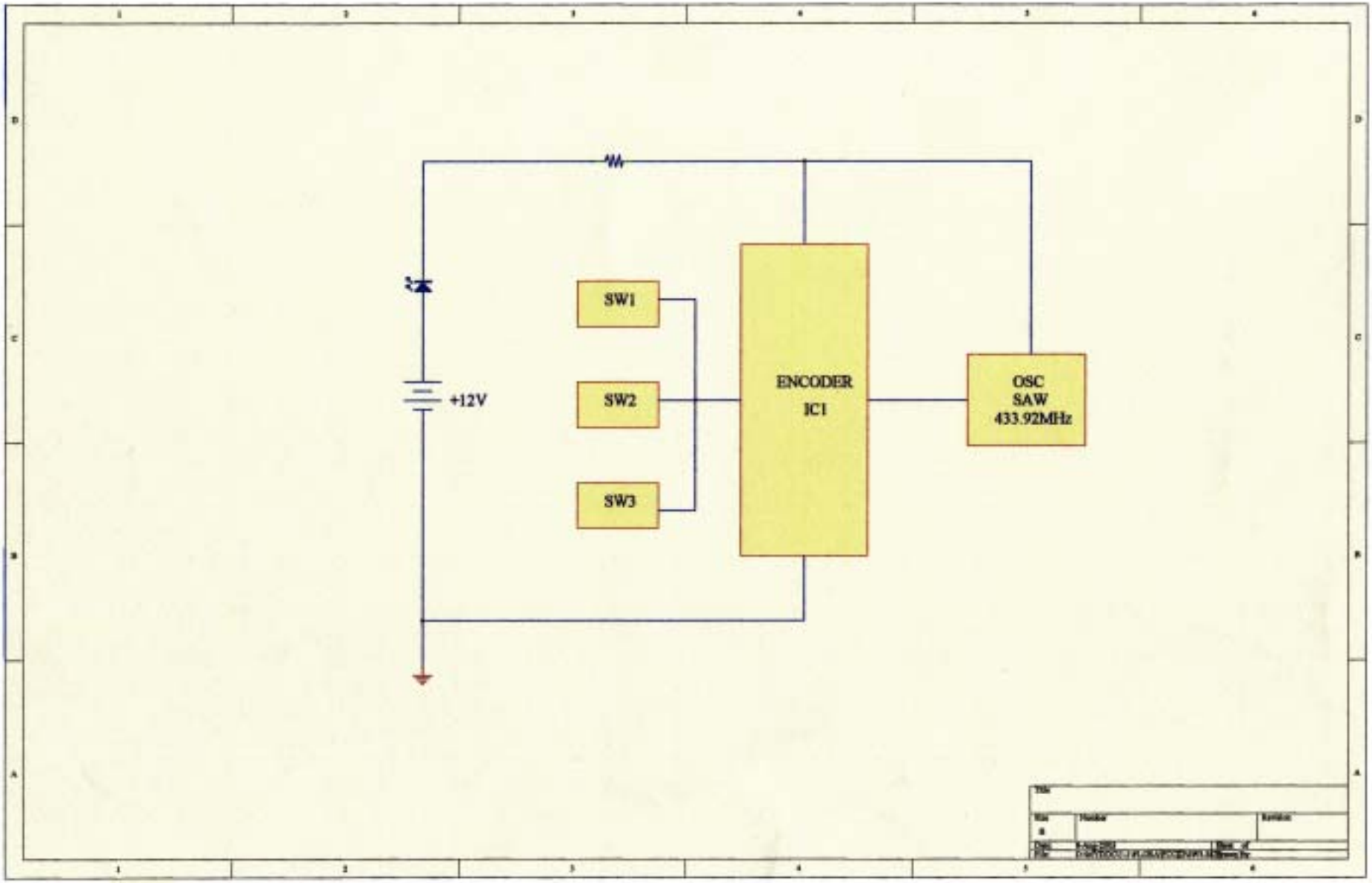
+12V
SW1
SW2
SW3
ENCODER
IC1
OSC
SAW
433.92MHz