REVISIONS							
REV	DESCRIPTION	DFT	DATE	CHK	DATE	APVD	DATE
1							
2							
3							
4							
5							
6							

PAGE	CONTENTS
1	COVER PAGE
2	REGULATOR
3	MINI-PCI CONNECTOR TO ARDON 2
4	ARDON2 MINI-PCI CONNECTIONS
5	ARDON2 ANALOG INTERFACE &BASEBAND SIGNALS
6	ARDON2 POWER
7	RAMON2
8	POWER AMPLIFIER 5.2 & 2.4
9	LNA & BALUN 5.2
10	RF SWITCH \ FILTER \ SMA
11	BASE BAND BIAS $ 40MHZ CLOCK
12	BASE BAND BIAS
13	LNA & BALUN 2.4

CALEXICO 2 MINI-PCI
REV. P
11B/G

ARDON B0
RANOM A2

Q3.7 CONNECTED TO R82.1
FB19 MODIFIED TO 33 OHM RESISTOR (0603)
R79 MODIFIED (FROM 0 OHM) TO 100 OHM RESISTOR (0402)

Tue Nov 04 10:29:22 2003 C5491504

ENG. NAME			
ITZHAK LEVI			
INTEL CONFIDENTIAL	calexico2_p	PAGE 1 OF 13	REV 01

COVER PAGE

BLOCK DIAGRAM CAN BE FIND IN CALEXICO2_SCHEMATIC_BLOCK_DIAGRAM.VSD FILE

Tue Nov 04 10:31:06 2003 C5491504

ENG. NAME ITZHAK LEVI			
INTEL CONFIDENTIAL	calexico2_p	PAGE 2 OF 13	REV 01

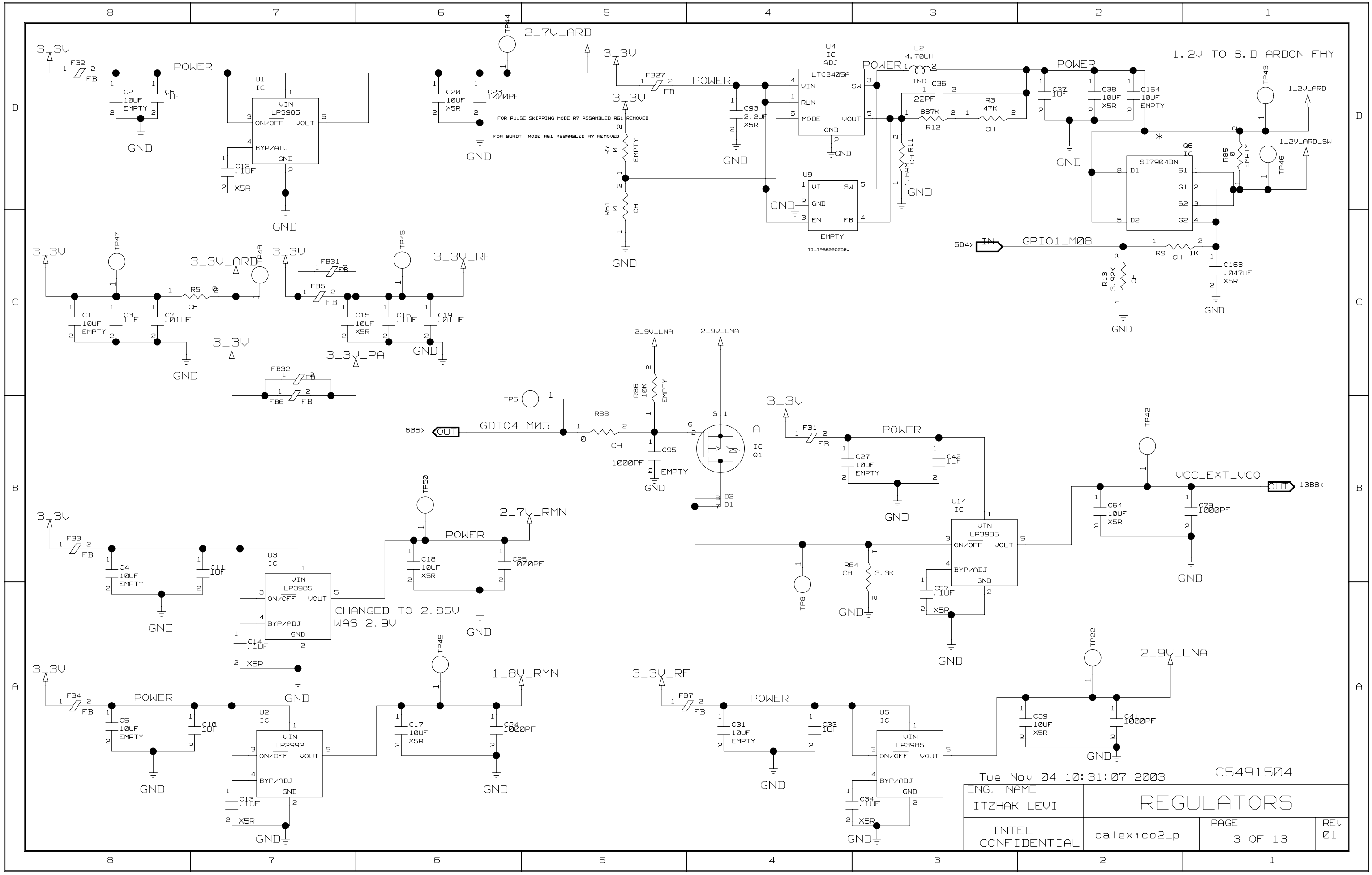
1.2V TO S.D ARDON FHY
2_7V_ARD
3_3V
POWER
GND
U1 IC VIN LP3985 ON/OFF VOUT BYP/ADJ GND
U4 IC ADJ LTC3405A VIN SW RUN MODE VOUT GND
U9 VI SW GND EN FB EMPTY
TI_TPS62200DBV
FOR PULSE SKIPPING MODE R7 ASSAMBLED R61 REMOVED
FOR BURDT MODE R61 ASSAMBLED R7 REMOVED
1_2V_ARD
1_2V_ARD_SW
Q6 IC SI7904DN
GPIO1_M08
3_3V_ARD
3_3V_RF
3_3V_PA
GDIO4_M05
IC Q1
2_9V_LNA
VCC_EXT_VCO
13B8<
U3 IC VIN LP3985
2_7V_RMN
CHANGED TO 2.85V
WAS 2.9V
U2 IC VIN LP2992
1_8V_RMN
U5 IC VIN LP3985
U14 IC VIN LP3985
Tue Nov 04 10:31:07 2003
C5491504
ENG. NAME
ITZHAK LEVI
REGULATORS
INTEL CONFIDENTIAL
calexico2_p
PAGE
3 OF 13
REV
01

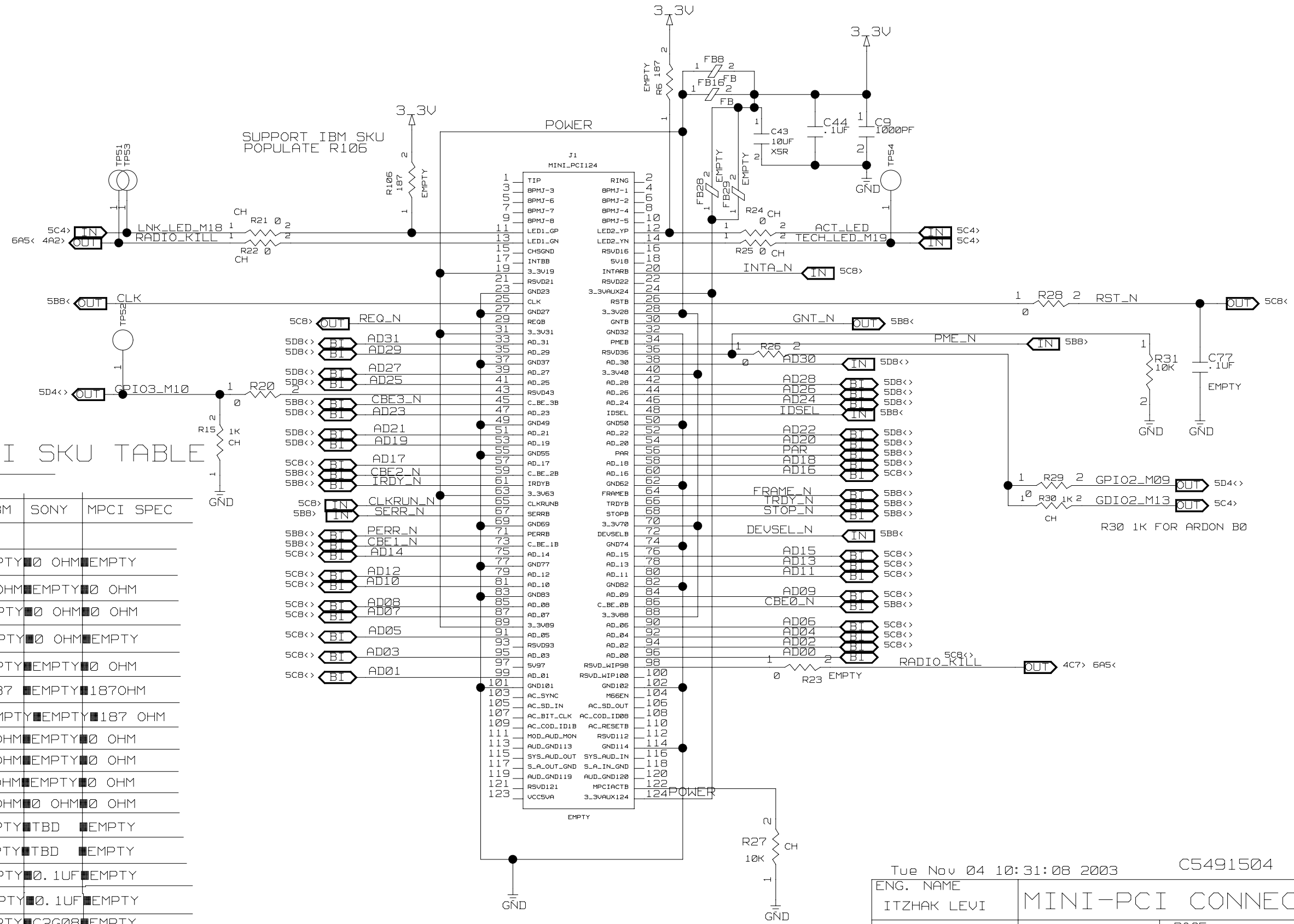

CALEXICO 2 MPCI SKU TABLE

REF	DELL	HPQ	FUJIT	IBM	SONY	MPCI SPEC
R21	0 OHM	0 OHM	0 OHM	EMPTY	0 OHM	EMPTY
R22	0 OHM	EMPTY	EMPTY	0 OHM	EMPTY	0 OHM
R23	0 OHM	EMPTY	0 OHM	EMPTY	0 OHM	0 OHM
R24	0 OHM	EMPTY	0 OHM	EMPTY	0 OHM	EMPTY
R25	0 OHM	EMPTY	EMPTY	EMPTY	EMPTY	0 OHM
R106	EMPTY	EMPTY	EMPTY	187	EMPTY	187OHM
R500	EMPTY	EMPTY	EMPTY	EMPTY	EMPTY	187 OHM
R73	0 OHM	0 OHM	0 OHM	0 OHM	EMPTY	0 OHM
R75	0 OHM	0 OHM	0 OHM	0 OHM	EMPTY	0 OHM
R80	0 OHM	0 OHM	0 OHM	0 OHM	EMPTY	0 OHM
R83	0 OHM	0 OHM	0 OHM	0 OHM	0 OHM	0 OHM
R92	EMPTY	EMPTY	EMPTY	EMPTY	TBD	EMPTY
C80	EMPTY	EMPTY	EMPTY	EMPTY	TBD	EMPTY
C115	EMPTY	EMPTY	EMPTY	EMPTY	0.1UF	EMPTY
C116	EMPTY	EMPTY	EMPTY	EMPTY	0.1UF	EMPTY
U22	EMPTY	EMPTY	EMPTY	EMPTY	C2G08	EMPTY
U24	EMPTY	EMPTY	EMPTY	EMPTY	C1G17	EMPTY

Tue Nov 04 10:31:08 2003 C5491504

ENG. NAME	MINI-PCI CONNECTOR		
ITZHAK LEVI			
INTEL CONFIDENTIAL	calexico2_p	PAGE 4 OF 13	REV 01

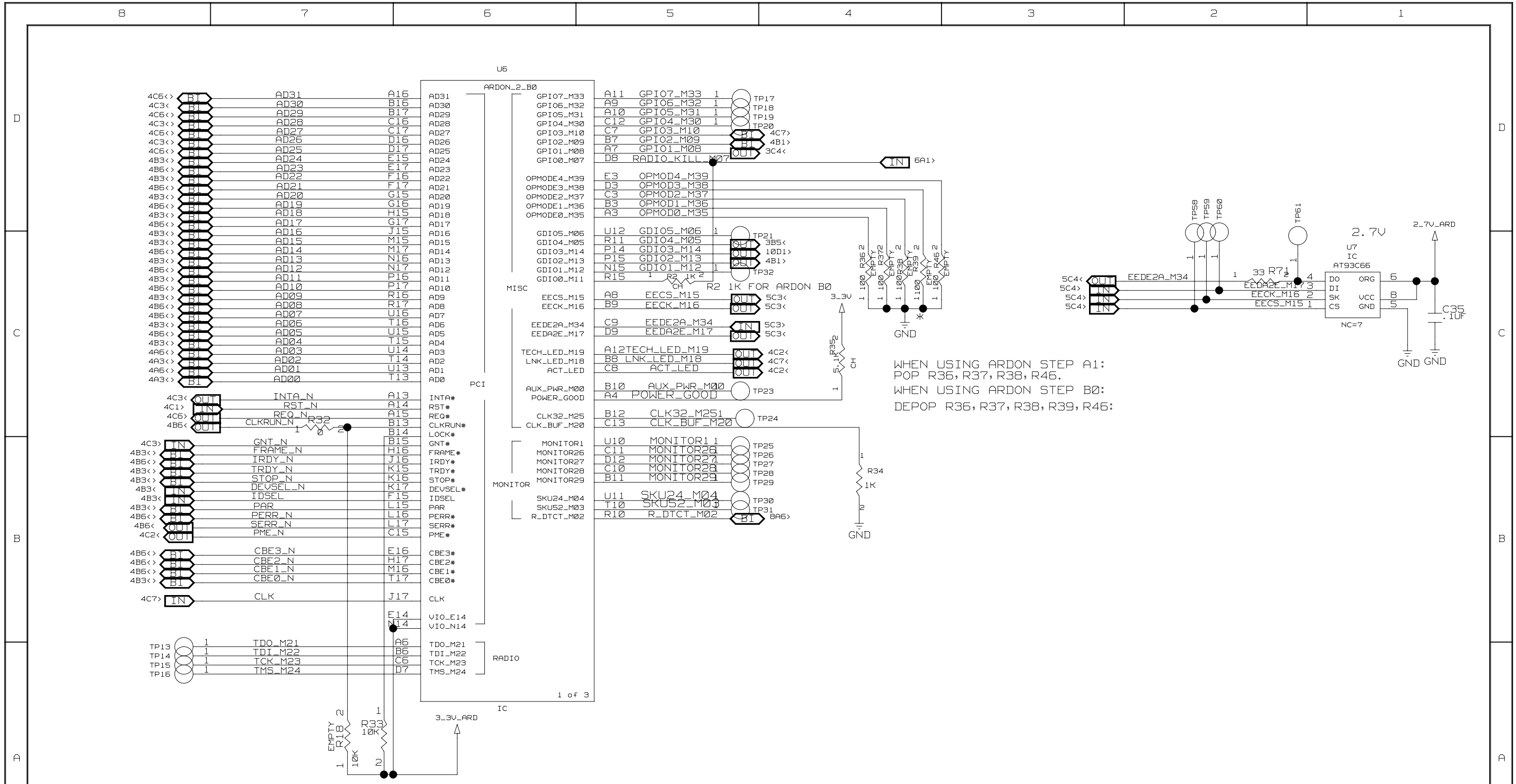

ARDON2 - MINI-PCI INTERFACE CONNECTIONS
EEPROM AND 50 PIN CONNECTOR

Tue Nov 04 10:31:08 2003 C5491504

ENG. NAME ITZHAK LEVI			
INTEL CONFIDENTIAL	calexico2_p	PAGE 5 OF 13	REV 01

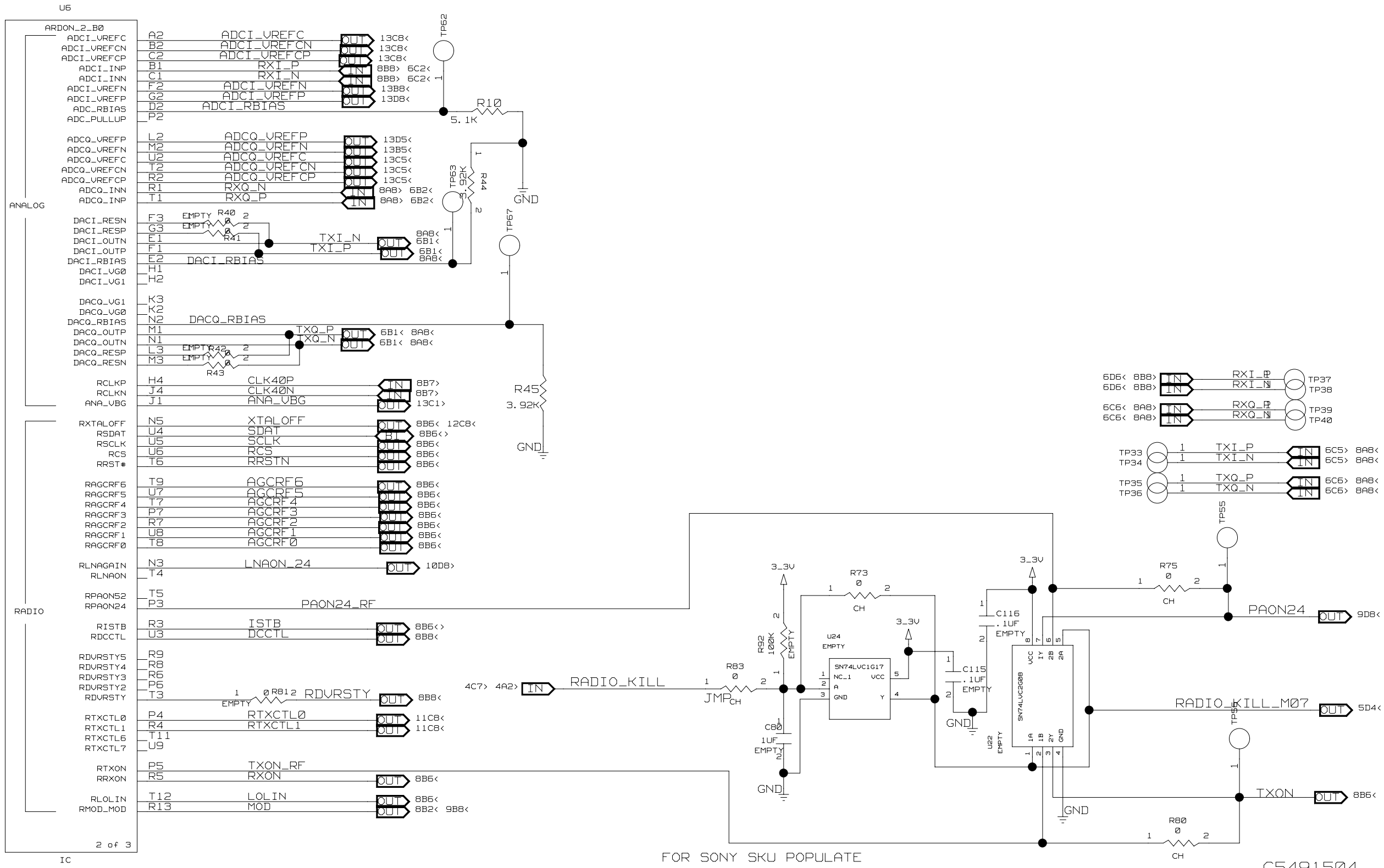

FOR SONY SKU POPULATE
U19, U22, C116, C115 R92, C80
EMPTY R30, R75, R73

Tue Nov 04 10:31:08 2003

C5491504

ARDON 2 ANALOG AND RADIO CONNECTIONS AND 50 PIN CONNECTOR

ENG. NAME			
ITZHAK LEVI			
INTEL CONFIDENTIAL	calexico2_p	PAGE 6 OF 13	REV 01

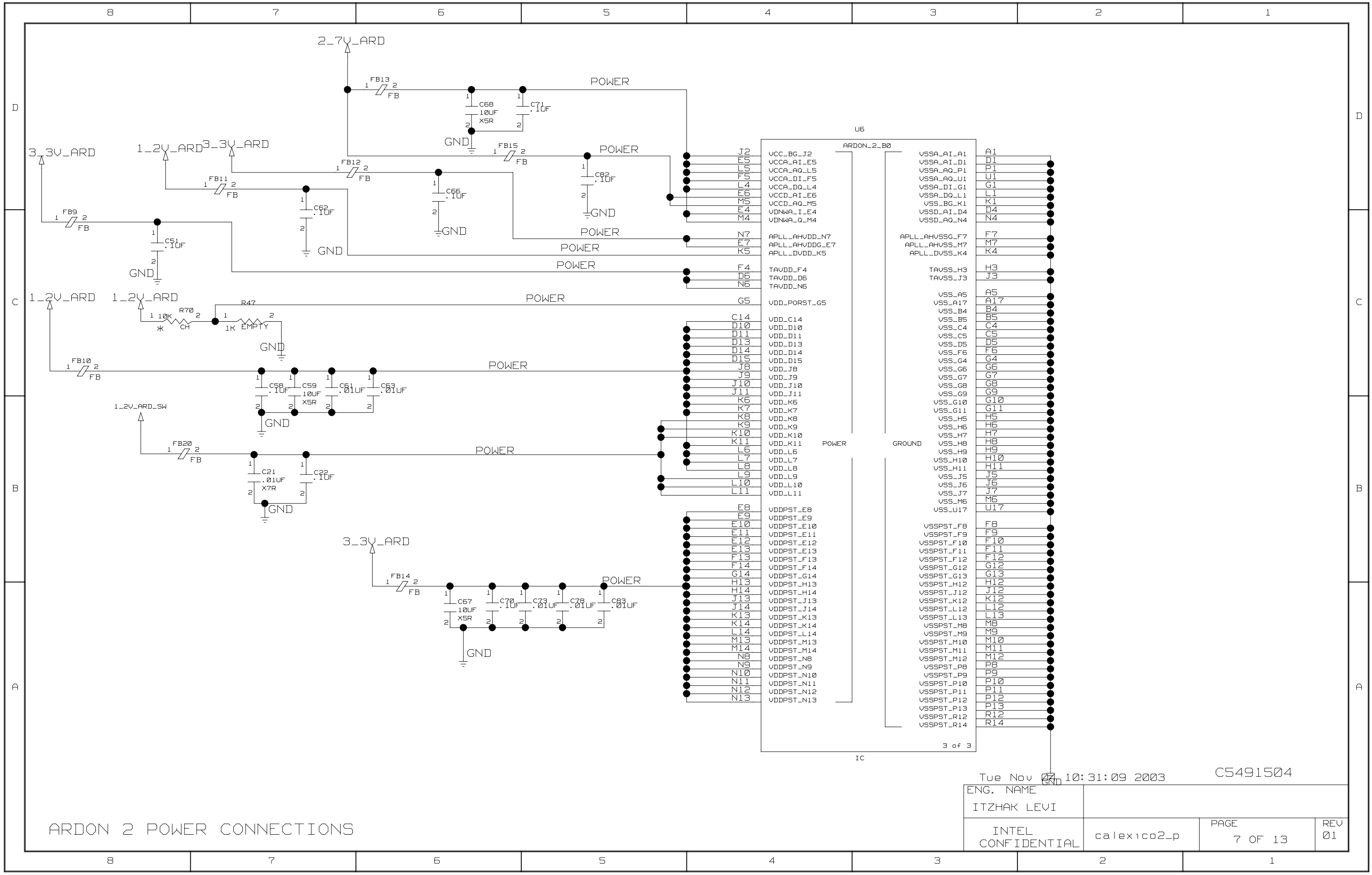
2_7V_ARD
3_3V_ARD
1_2V_ARD
3_3V_ARD
1_2V_ARD
1_2V_ARD
1_2V_ARD_SW
3_3V_ARD
FB13
FB15
FB12
FB11
FB9
FB10
FB20
FB14
FB
C68 10UF X5R
C71 .1UF
C82 .1UF
C66 .1UF
C62 .1UF
C51 .1UF
R70 10K CH
R47 1K EMPTY
C58 .1UF
C59 10UF X5R
C61 .01UF
C63 .01UF
C21 .01UF X7R
C22 .1UF
C67 10UF X5R
C70 .1UF
C73 .01UF
C78 .01UF
C83 .01UF
POWER
GND
U6
ARDON_2_B0
VCC_BG_J2
VCCA_AI_E5
VCCA_AQ_L5
VCCA_DI_F5
VCCA_DQ_L4
VCCD_AI_E6
VCCD_AQ_M5
VDNWA_I_E4
VDNWA_Q_M4
APLL_AHVDD_N7
APLL_AHVDDG_E7
APLL_DVDD_K5
TAVDD_F4
TAVDD_D6
TAVDD_N6
VDD_PORST_G5
VDD_C14
VDD_D10
VDD_D11
VDD_D13
VDD_D14
VDD_D15
VDD_J8
VDD_J9
VDD_J10
VDD_J11
VDD_K6
VDD_K7
VDD_K8
VDD_K9
VDD_K10
VDD_K11
VDD_L6
VDD_L7
VDD_L8
VDD_L9
VDD_L10
VDD_L11
VDDPST_E8
VDDPST_E9
VDDPST_E10
VDDPST_E11
VDDPST_E12
VDDPST_E13
VDDPST_F13
VDDPST_F14
VDDPST_G14
VDDPST_H13
VDDPST_H14
VDDPST_J13
VDDPST_J14
VDDPST_K13
VDDPST_K14
VDDPST_L14
VDDPST_M13
VDDPST_M14
VDDPST_N8
VDDPST_N9
VDDPST_N10
VDDPST_N11
VDDPST_N12
VDDPST_N13
POWER
VSSA_AI_A1
VSSA_AI_D1
VSSA_AQ_P1
VSSA_AQ_U1
VSSA_DI_G1
VSSA_DQ_L1
VSS_BG_K1
VSSD_AI_D4
VSSD_AQ_N4
APLL_AHVSSG_F7
APLL_AHVSS_M7
APLL_DVSS_K4
TAVSS_H3
TAVSS_J3
VSS_A5
VSS_A17
VSS_B4
VSS_B5
VSS_C4
VSS_C5
VSS_D5
VSS_F6
VSS_G4
VSS_G6
VSS_G7
VSS_G8
VSS_G9
VSS_G10
VSS_G11
VSS_H5
VSS_H6
VSS_H7
VSS_H8
VSS_H9
VSS_H10
VSS_H11
VSS_J5
VSS_J6
VSS_J7
VSS_M6
VSS_U17
VSSPST_F8
VSSPST_F9
VSSPST_F10
VSSPST_F11
VSSPST_F12
VSSPST_G12
VSSPST_G13
VSSPST_H12
VSSPST_J12
VSSPST_K12
VSSPST_L12
VSSPST_L13
VSSPST_M8
VSSPST_M9
VSSPST_M10
VSSPST_M11
VSSPST_M12
VSSPST_P8
VSSPST_P9
VSSPST_P10
VSSPST_P11
VSSPST_P12
VSSPST_P13
VSSPST_R12
VSSPST_R14
GROUND
3 of 3
IC
Tue Nov 07 10:31:09 2003
C5491504
ENG. NAME
ITZHAK LEVI
INTEL CONFIDENTIAL
calexico2_p
PAGE
7 OF 13
REV
01
ARDON 2 POWER CONNECTIONS

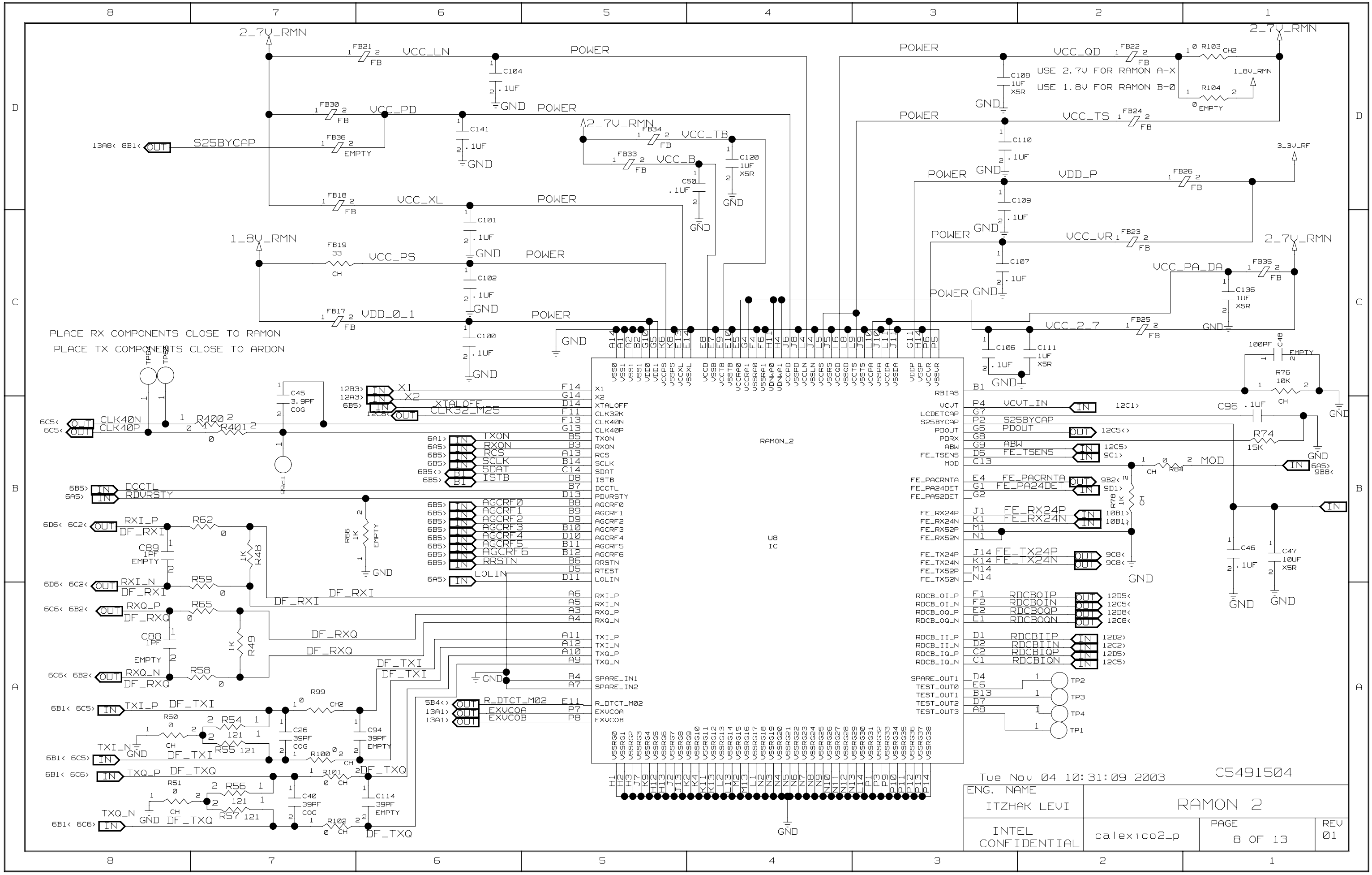
2_7V_RMN
VCC_LN
POWER
VCC_PD
S25BYCAP
VCC_TB
VCC_B
VCC_XL
1_8V_RMN
VCC_PS
VDD_0_1
VCC_QD
USE 2.7V FOR RAMON A-X
USE 1.8V FOR RAMON B-0
1_8V_RMN
VCC_TS
3_3V_RF
VDD_P
VCC_VR
VCC_PA_DA
VCC_2_7
PLACE RX COMPONENTS CLOSE TO RAMON
PLACE TX COMPONENTS CLOSE TO ARDON
CLK40N
CLK40P
X1
X2
XTALOFF
CLK32_M25
TXON
RXON
RCS
SCLK
SDAT
ISTB
DCCTL
RDVRSTY
AGCRF0
AGCRF1
AGCRF2
AGCRF3
AGCRF4
AGCRF5
AGCRF6
RRSTN
LOLIN
RXI_P
RXI_N
RXQ_P
RXQ_N
DF_RXI
DF_RXQ
TXI_P
TXI_N
TXQ_P
TXQ_N
DF_TXI
DF_TXQ
R_DTCT_M02
EXVCOA
EXVCOB
RAMON_2
U8
IC
VCVT_IN
S25BYCAP
PDOUT
ABW
FE_TSENS
MOD
FE_PACRNTA
FE_PA24DET
FE_RX24P
FE_RX24N
FE_TX24P
FE_TX24N
RDCBOIP
RDCBOIN
RDCBOQP
RDCBOQN
RDCBIIP
RDCBIIN
RDCBIQP
RDCBIQN
SPARE_IN1
SPARE_IN2
SPARE_OUT1
TEST_OUT0
TEST_OUT1
TEST_OUT2
TEST_OUT3
RBIAS
VCVT
LCDETCAP
PDIRX
Tue Nov 04 10:31:09 2003
C5491504
ENG. NAME
ITZHAK LEVI
RAMON 2
INTEL CONFIDENTIAL
calexico2_p
PAGE
8 OF 13
REV
01

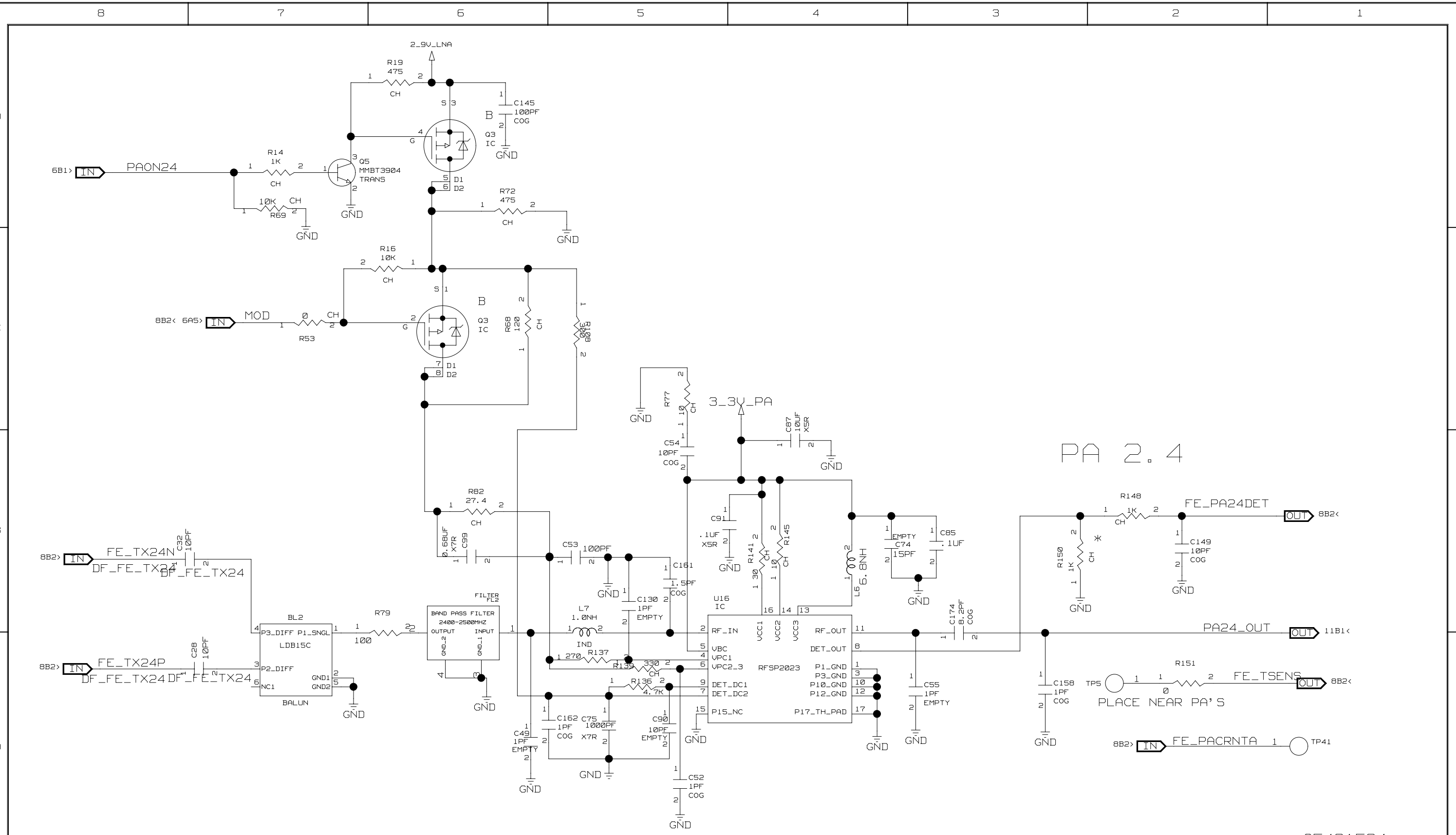

Tue Nov 04 10:31:10 2003 C5491504

ENG. NAME ITZHAK LEVI	POWER AMPLIFIERS		
INTEL CONFIDENTIAL	calexico2_p	PAGE 9 OF 13	REV 01

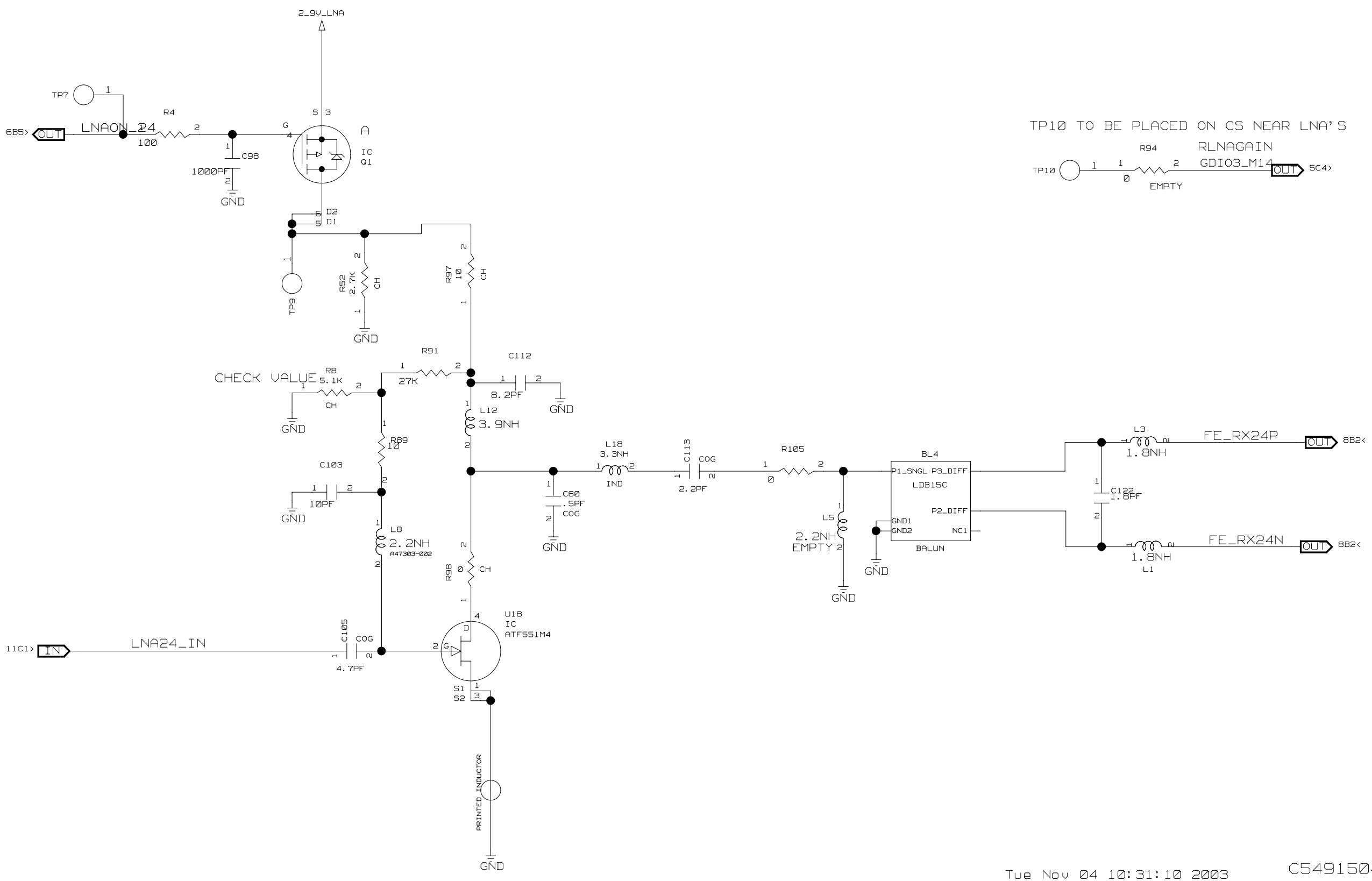

Tue Nov 04 10:31:10 2003 C5491504

ENG. NAME	LNA_24		
INTEL CONFIDENTIAL	calexico2_p	PAGE 10 OF 13	REV 01

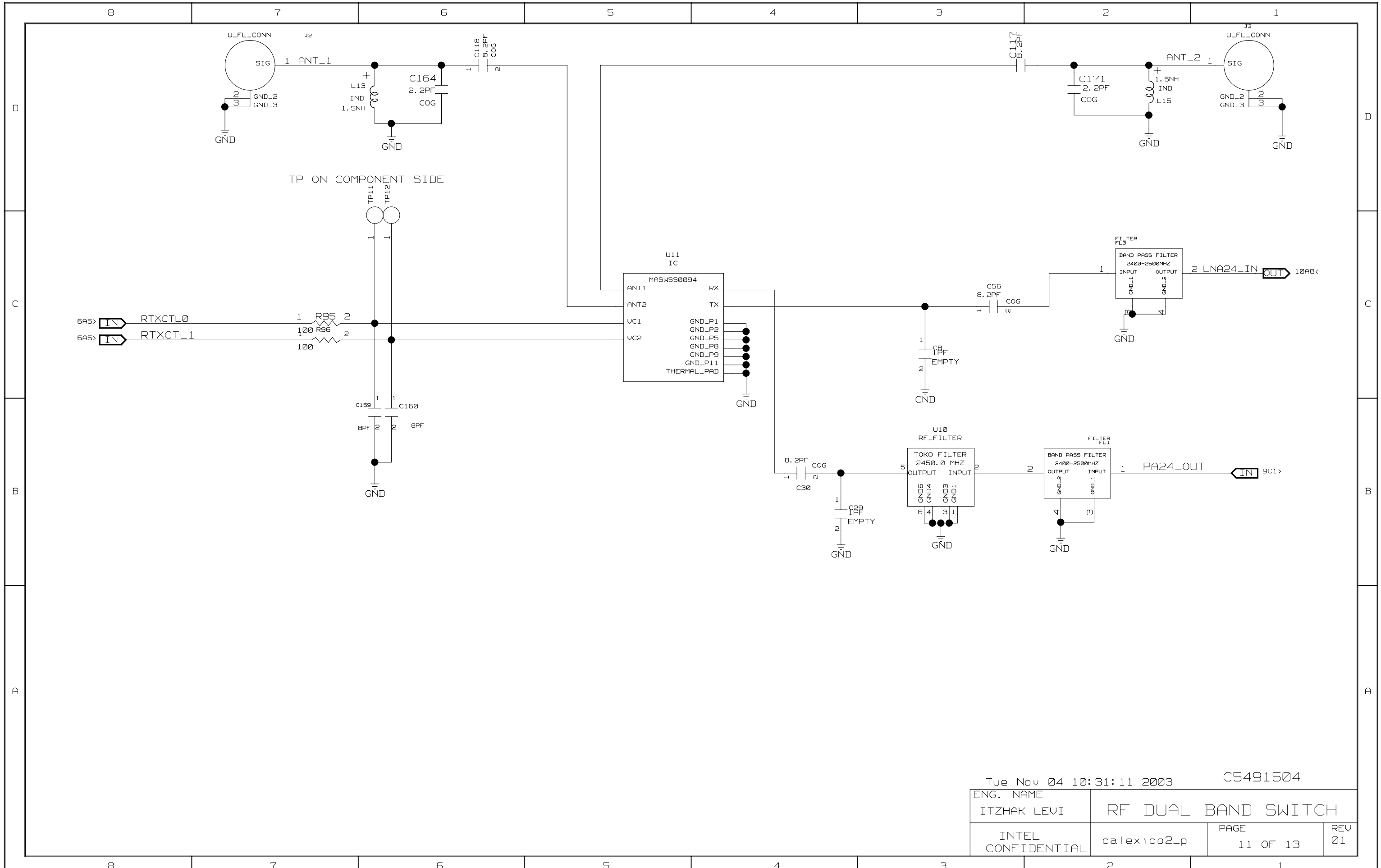

Tue Nov 04 10:31:11 2003 C5491504

ENG. NAME ITZHAK LEVI	RF DUAL BAND SWITCH		
INTEL CONFIDENTIAL	calexico2_p	PAGE 11 OF 13	REV 01

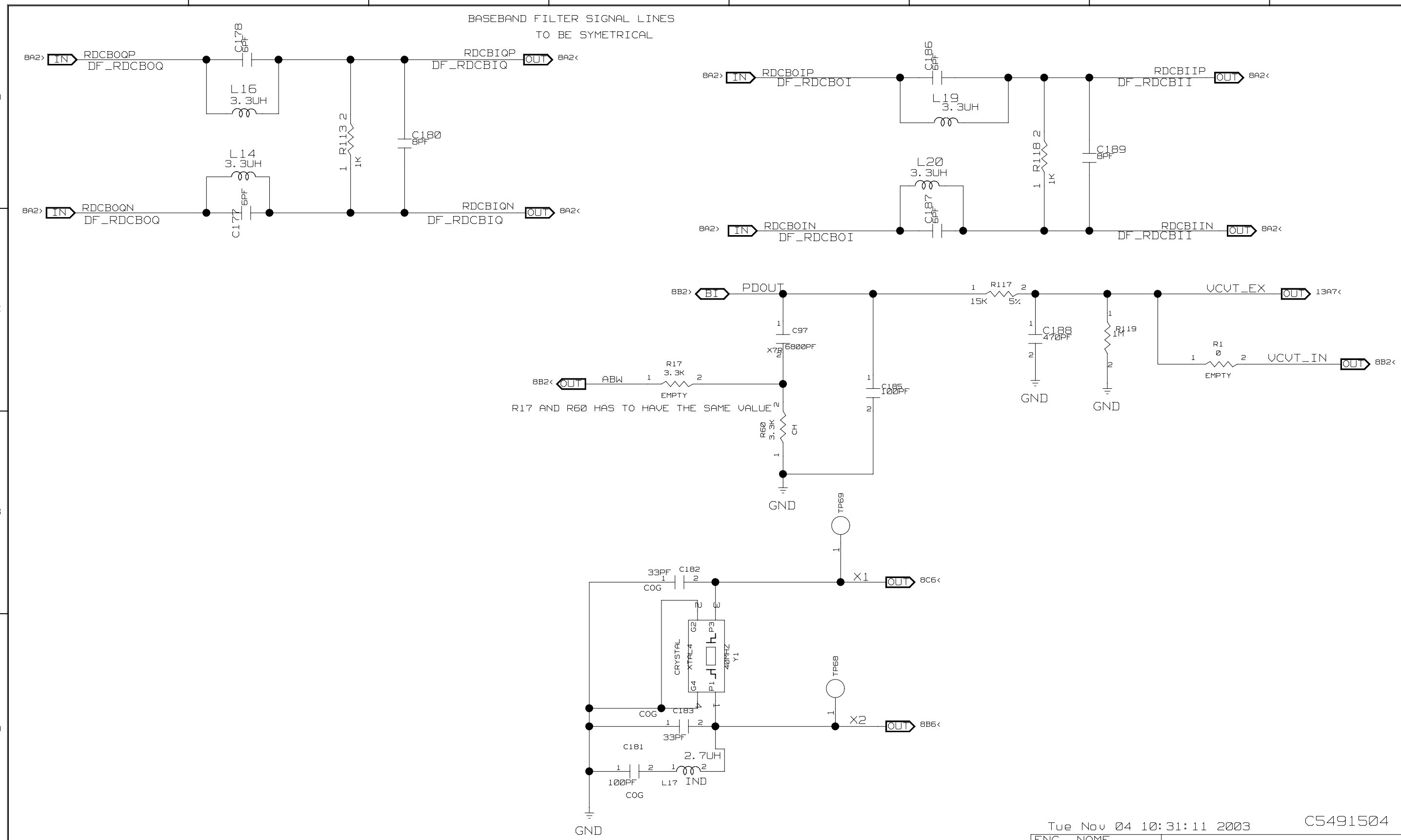

Tue Nov 04 10:31:11 2003 C5491504

ENG. NAME			
ITZHAK LEVI			
INTEL CONFIDENTIAL	calexico2_p	PAGE 12 OF 13	REV 01

BASE BAND BIAD, 40 MHZ CLOCK AND PLL

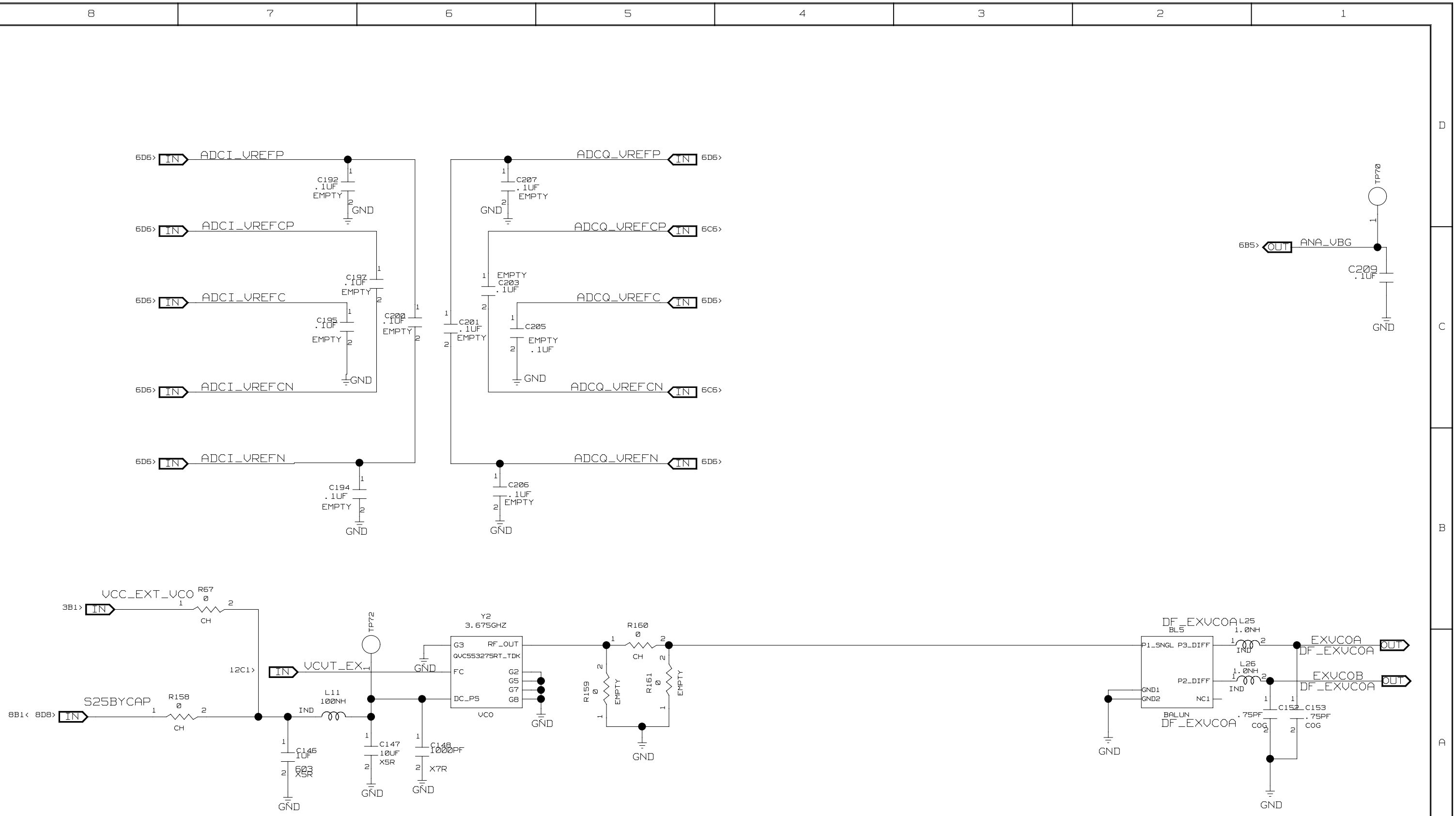

Tue Nov 04 10:31:11 2003 C5491504

ENG. NAME			
ITZHAK LEVI			
INTEL CONFIDENTIAL	calexico2_p	PAGE 13 OF 13	REV 01