REVISIONS			
REV	DESCRIPTION	DATE	APPROVED
X1	ENGINEERING RELEASE		

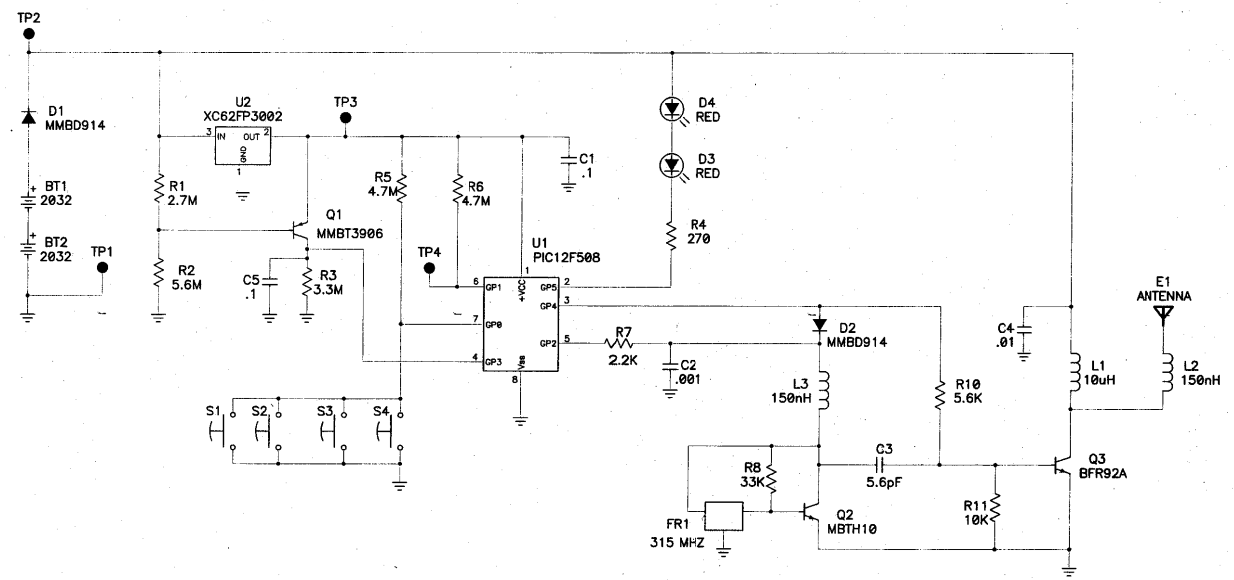

3. ALL RESISTOR VALUES ARE IN OHMS.
2. ALL CAPACITOR VALUES ARE IN MICROFARADS.
1. THIS SCHEMATIC TO BE USED IN CONJUNCTION WITH APPROPRIATE ASSEMBLY DRAWING AND PARTS LIST.

NOTES: (UNLESS OTHERWISE SPECIFIED)

CAD OPERATOR: B. NYHUS	DATE 29APR08	Linear CARLSBAD, CA
CHECKED:	DATE	TITLE: SCHEMATIC, DXS-65
APPROVED:	DATE	SIZE: B / DRAWING NO.: 228488 / REV.: X2
APPROVED:	DATE	SCALE: NONE / Tue Apr 29, 2008 / SHEET: 1 OF 1