REVISIONS				
CK	REV	DESCRIPTION	DATE	APPROVAL
	X6	ENGINEERING PRE RELEASE		
		PRODUCTION RELEASE PER ECO # XXXX		

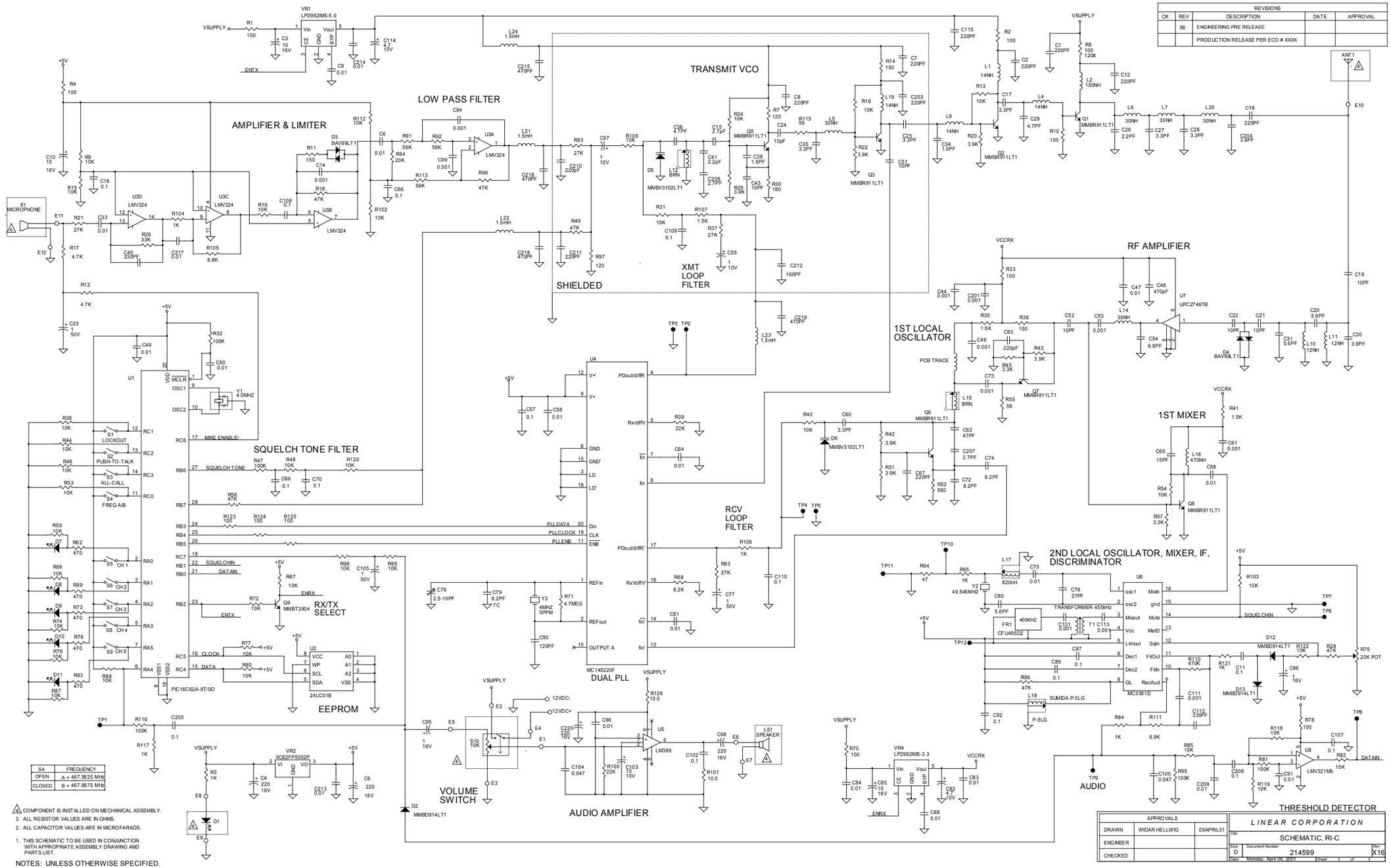

S4	FREQUENCY
OPEN	A = 467.5625 MHz
CLOSED	B = 467.6875 MHz

⚠ COMPONENT IS INSTALLED ON MECHANICAL ASSEMBLY.
3. ALL RESISTOR VALUES ARE IN OHMS.
2. ALL CAPACITOR VALUES ARE IN MICROFARADS.
1. THIS SCHEMATIC TO BE USED IN CONJUNCTION WITH APPROPRIATE ASSEMBLY DRAWING AND PARTS LIST.

NOTES: UNLESS OTHERWISE SPECIFIED.

APPROVALS		
DRAWN	WIDAR HELLWIG	09APRIL01
ENGINEER		
CHECKED		

LINEAR CORPORATION

Title: SCHEMATIC, RI-C

Size: D | Document Number: 214599 | Rev: X16

Date: Monday, April 09, 2001 | Sheet 1 of 1