REVISIONS			
REV	DESCRIPTION	DATE	APPROVED
D01	REVISED PER EC0 #11896 BN KW	4/1/13	BN
D02	REVISED PER EC0 #11920 AF		

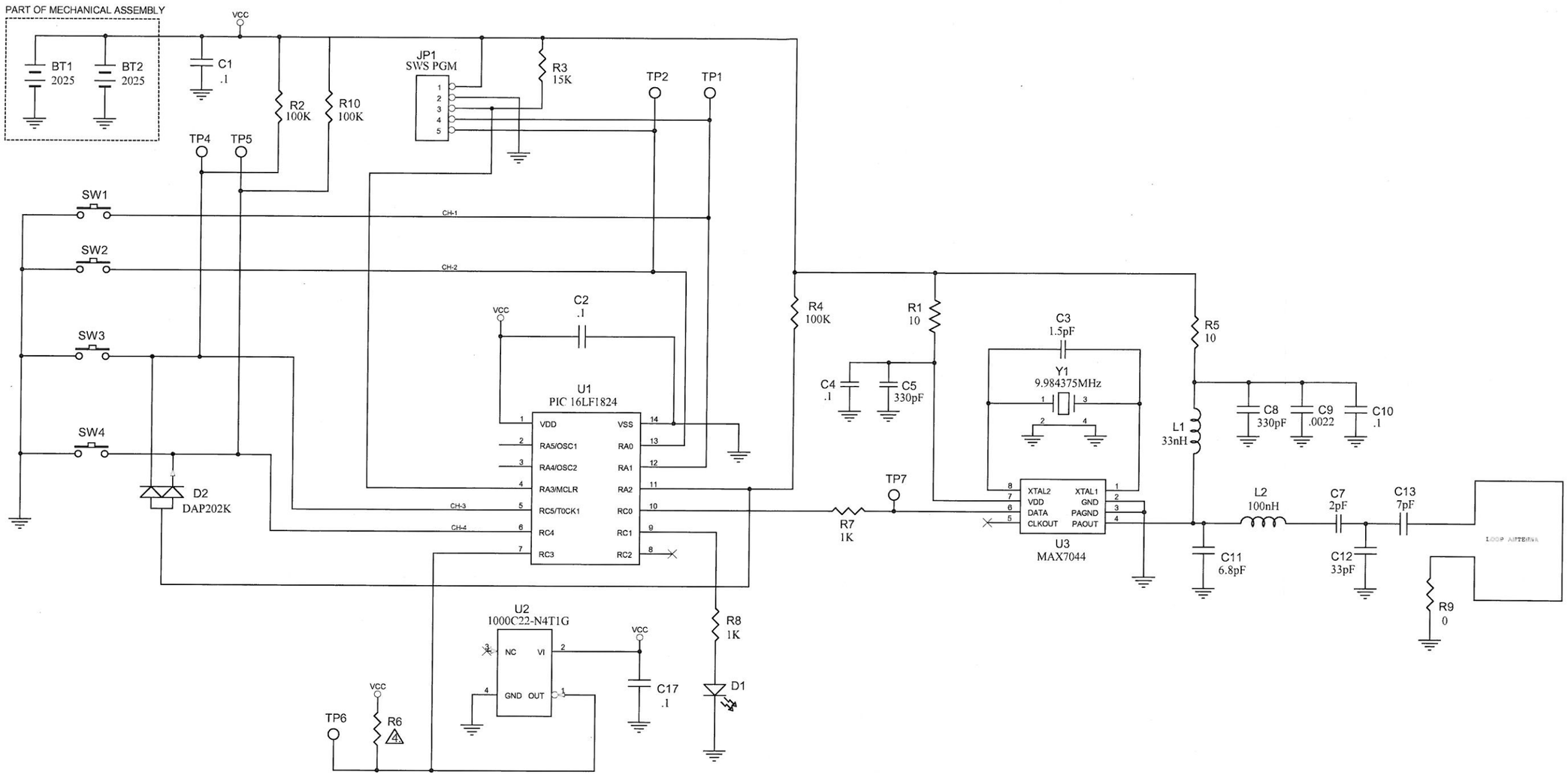

4. NOT USED IN THIS ASSEMBLY
3. ALL RESISTOR VALUES ARE IN OHMS.
2. ALL CAPACITOR VALUES ARE IN MICROFARADS.
1. THIS SCHEMATIC TO BE USED IN CONJUNCTION WITH APPROPRIATE ASSEMBLY DRAWING AND PARTS LIST.

NOTES: (UNLESS OTHERWISE SPECIFIED)

FILE NAME:		Linear® CARLSBAD, CA
CAD OPERATOR: B. NYHUS	DATE 05MAR13	TITLE: SCHEMATIC,ITI/GE 4BTN FOB
CHECKED:	DATE	
APPROVED: B. NYHUS	DATE 4/1/13	SIZE: B / DRAWING NO.: 235168 / REV.: D02
APPROVED:	DATE	SCALE: NONE / SHEET: 1 OF 1