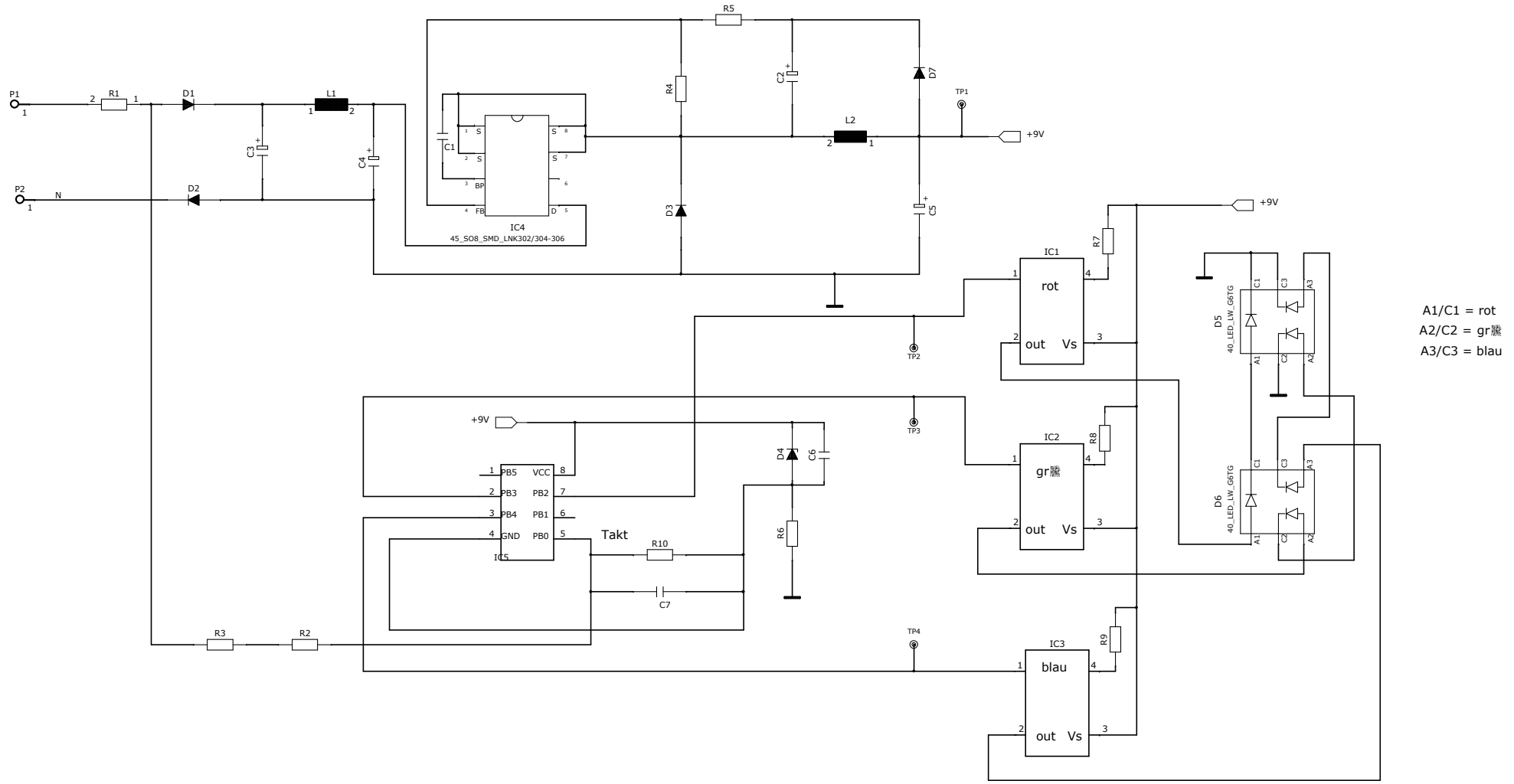

						Signature
	C		25.06.2007	V.Hartmann	H.Dellian	
	B		15.05.2007	V.Hartmann	H.Dellian	
AA	<revision>	first edition	14.03.2007	V.Hartmann	H.Dellian	Page 1 of 1
index	revision	subject of change	date	editor	checked	

OSRAM
BL D/CE-M

Schaltplan / schematic
Parathom CL A/B/P CC

Proprietary data. company confidential. All rights reserved.