REV LTR	DATE	REV . DIMENSION	DESIGN	APPROVE
B				
C				

REFERENCE ONLY

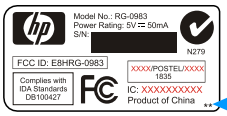

VENDOR ID MARK.

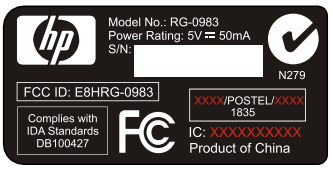

SCALE: 1.5 : 1

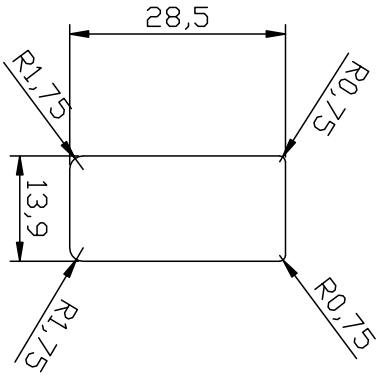

NOTES:

1. MATERIAL: SYNTHETIC MYLAR + TEXTURE SATIN t=0.075mm
2. BACKGROUND COLOR: JACK BLACK
3. TEXT & SYMBOLS COLOR: PANTONE 429C
4. RELEASE LINER: REG2
5. LABEL VENDOR HAS TO BE APPRD. BY UL/CSA
6. The product and component need comply with HP GSE REV. K
   (Link to http://www.hp.com/hpinfo/globalcitizenship/environment/pdf/gse.pdf)

RG-0983	253-00983L-	HP
MODEL NO.	PART NO.	REMARK

CHICONY ELECTRONICS CO.,LTD

APPROVED	CHECKED	DESIGNED
ERIKA	T.S. MAGGIE	CLAIRE
03/02-'10	03/02-'10	03/04-'10

MAT.: NOTES

SPEC: NOTES

FINISH: NOTES

TOL: | Q'TY | SIZE: A4

SCALE: 1 : 1 | UNIT: MM

MODEL NO.: RG-0983

NAME: (FOR DONGLE)(US.../Indonesia/Singapore/Aus.) (C) SPEC. ID LABEL

DWG NO.: RG-0983-FCC(C)-X0