Half Dome High Band, 30W EDGE/30W GSM

Notes:
1. Gain numbers and power levels and P1dB numbers are room temp.
2. (-155) => Noise pwr = -155 dBm/Hz
3. I/O # Not Used:
4. Last used I/O #:

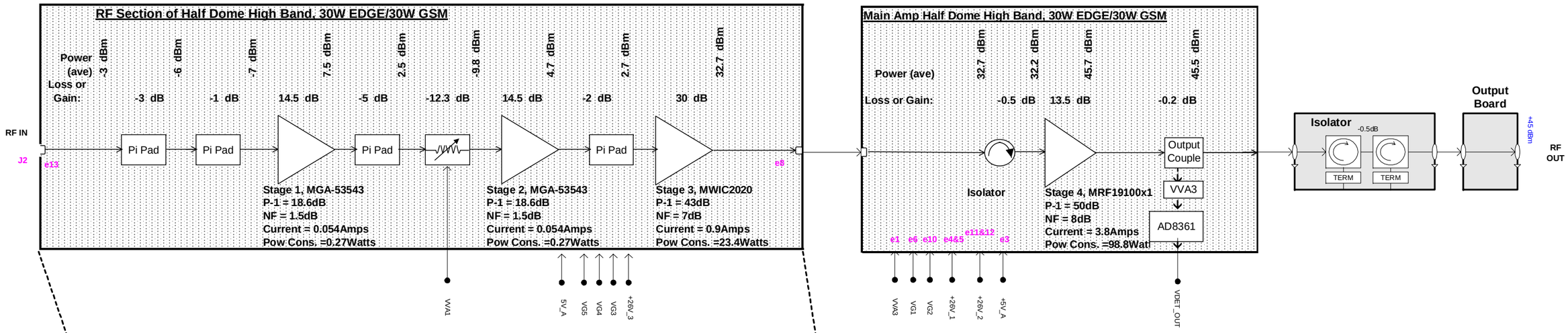

High Band Main Amp Table				
	PA Power			Output Stage
Band	EDGE	GSM	CCA P/N:	Description
PCS	30	30	500-06521-002	1 x MRF19100
DCS	30	30	500-06521-101	1 x MRF19100

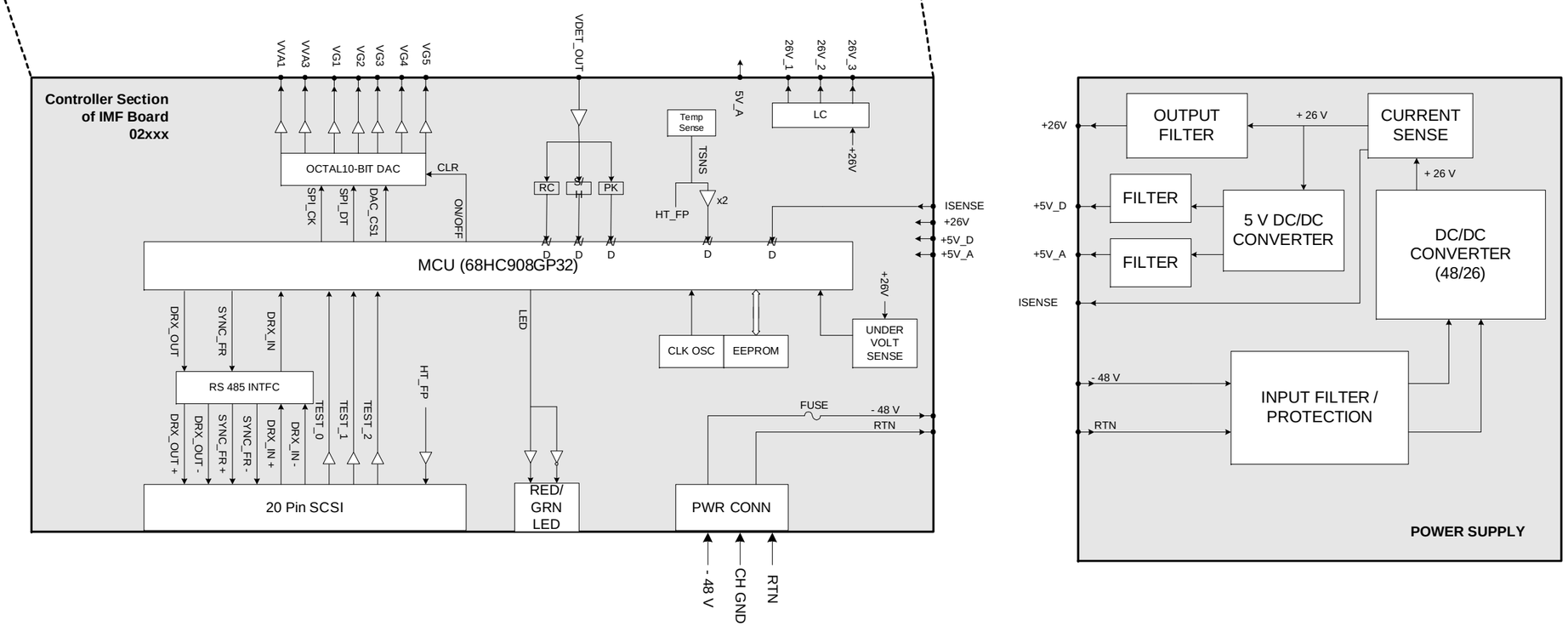

D350-06420

DRAWN BY: M. Daniels
2/21/03
REV. A