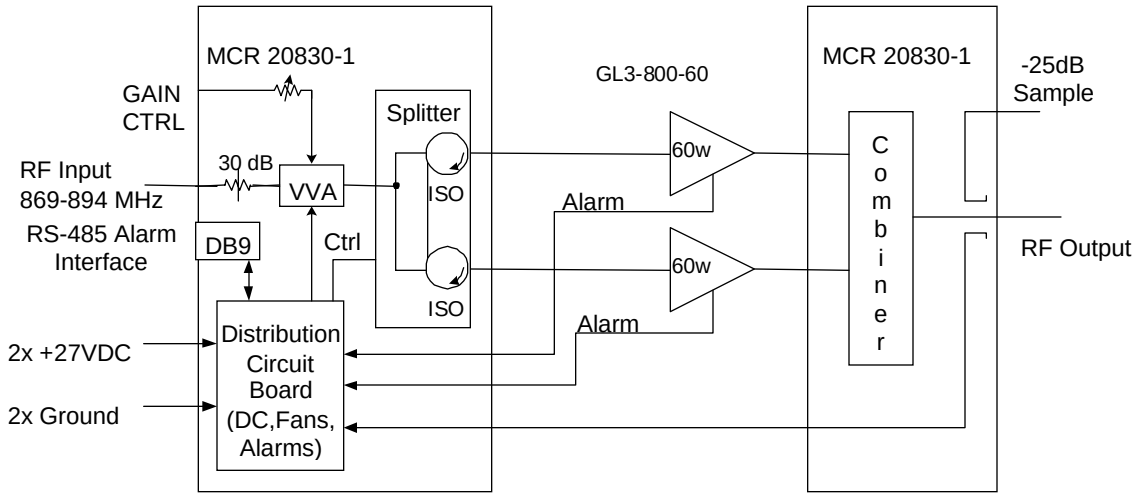

System Block Diagram

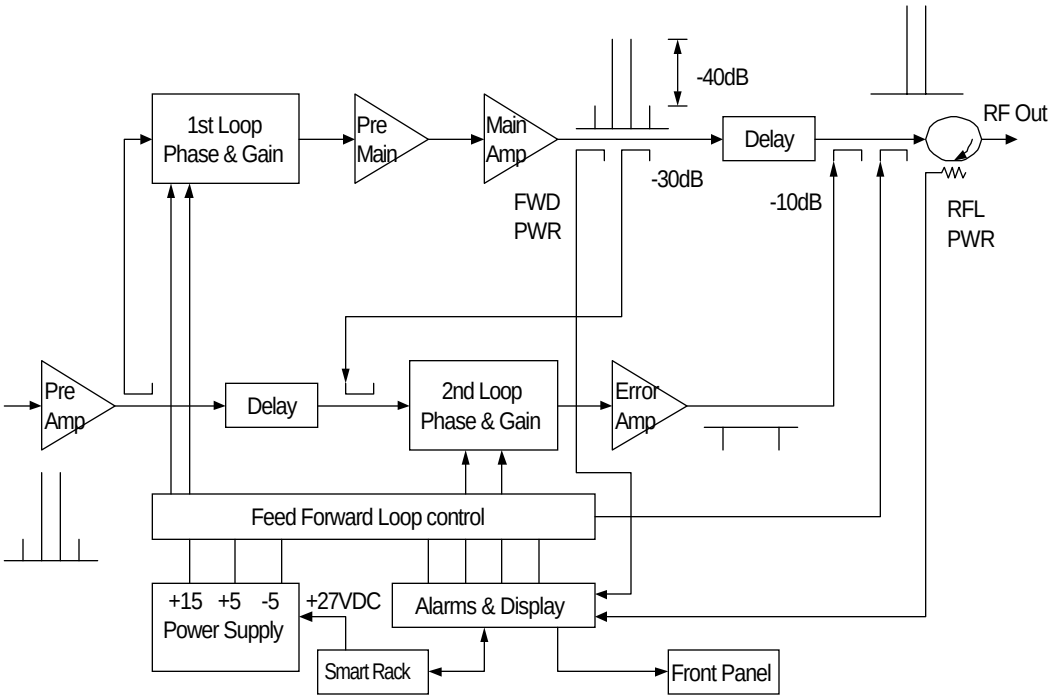

Multi-Carrier Power Amplifier Functional Block Diagram