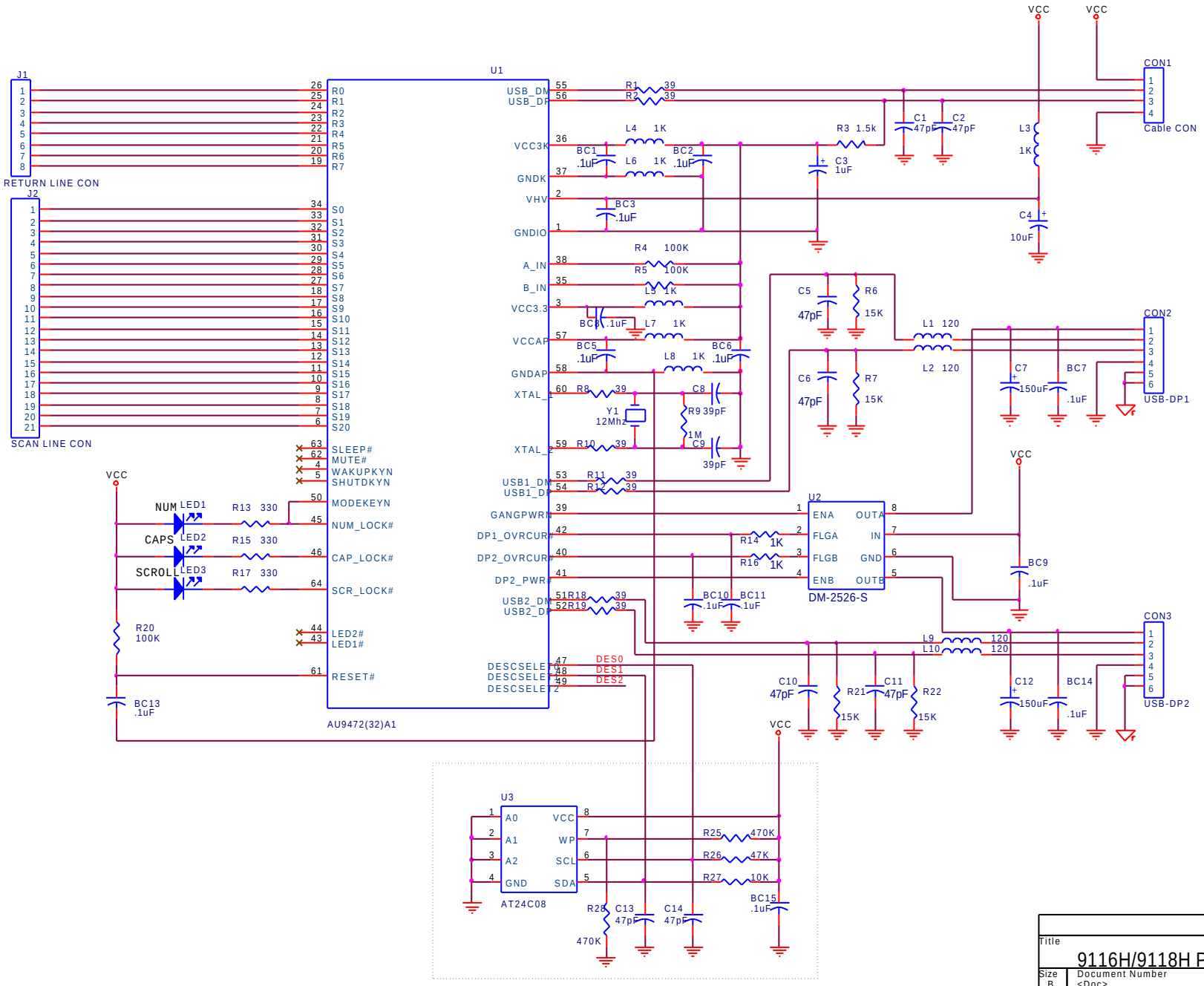

Title	9116H/9118H PCB	
Size B	Document Number <Doc>	Rev 0.9
Date: Wednesday, May 16, 2001	Sheet 1 of 1	