5.0 Quality System at Microwave Data Systems

Microwave Data Systems has been registered to ISO 9001 since December 1995.

6.0 Product Labels

The label which will be used on the MDS 2710D Data Transceiver is shown below. This label will be used after Type Acceptance has been granted by the FCC.

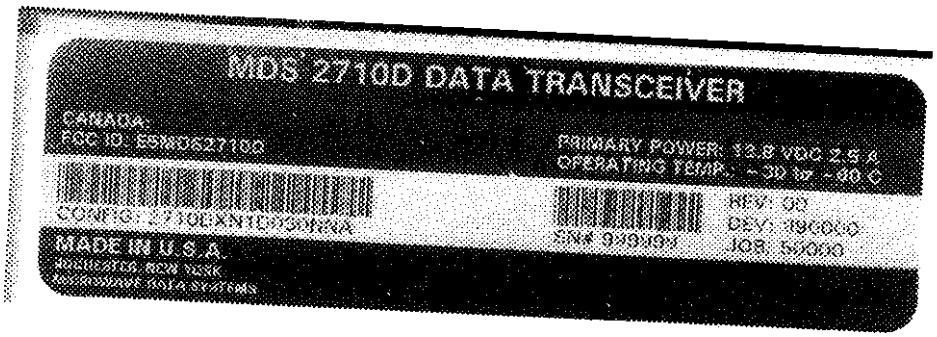
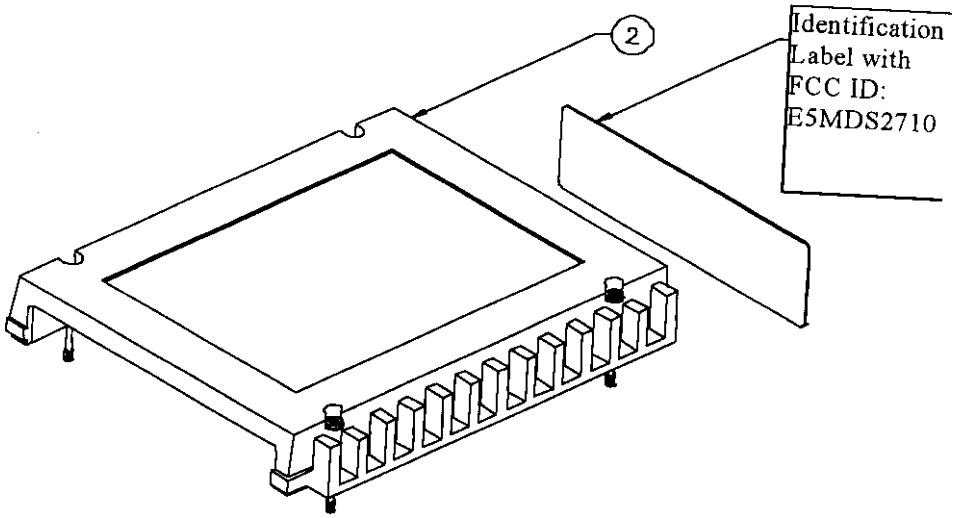
Location of Identification Label: