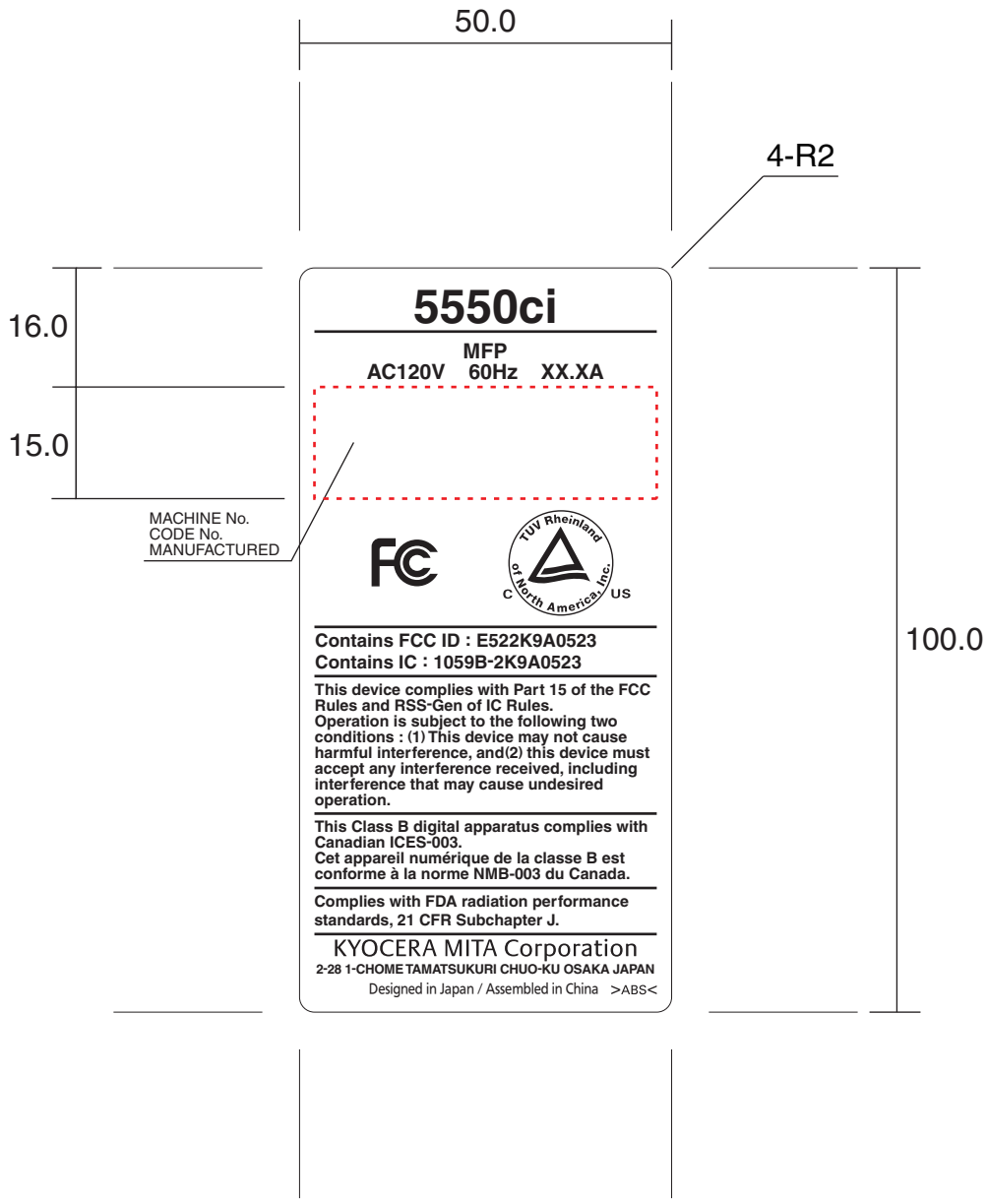
50.0
4-R2
16.0
15.0
100.0
MACHINE No.
CODE No.
MANUFACTURED
5550ci
MFP
AC120V 60Hz XX.XA
Contains FCC ID : E522K9A0523
Contains IC : 1059B-2K9A0523
This device complies with Part 15 of the FCC Rules and RSS-Gen of IC Rules.
Operation is subject to the following two conditions : (1) This device may not cause harmful interference, and(2) this device must accept any interference received, including interference that may cause undesired operation.
This Class B digital apparatus complies with Canadian ICES-003.
Cet appareil numérique de la classe B est conforme à la norme NMB-003 du Canada.
Complies with FDA radiation performance standards, 21 CFR Subchapter J.
KYOCERA MITA Corporation
2-28 1-CHOME TAMATSUKURI CHUO-KU OSAKA JAPAN
Designed in Japan / Assembled in China >ABS<

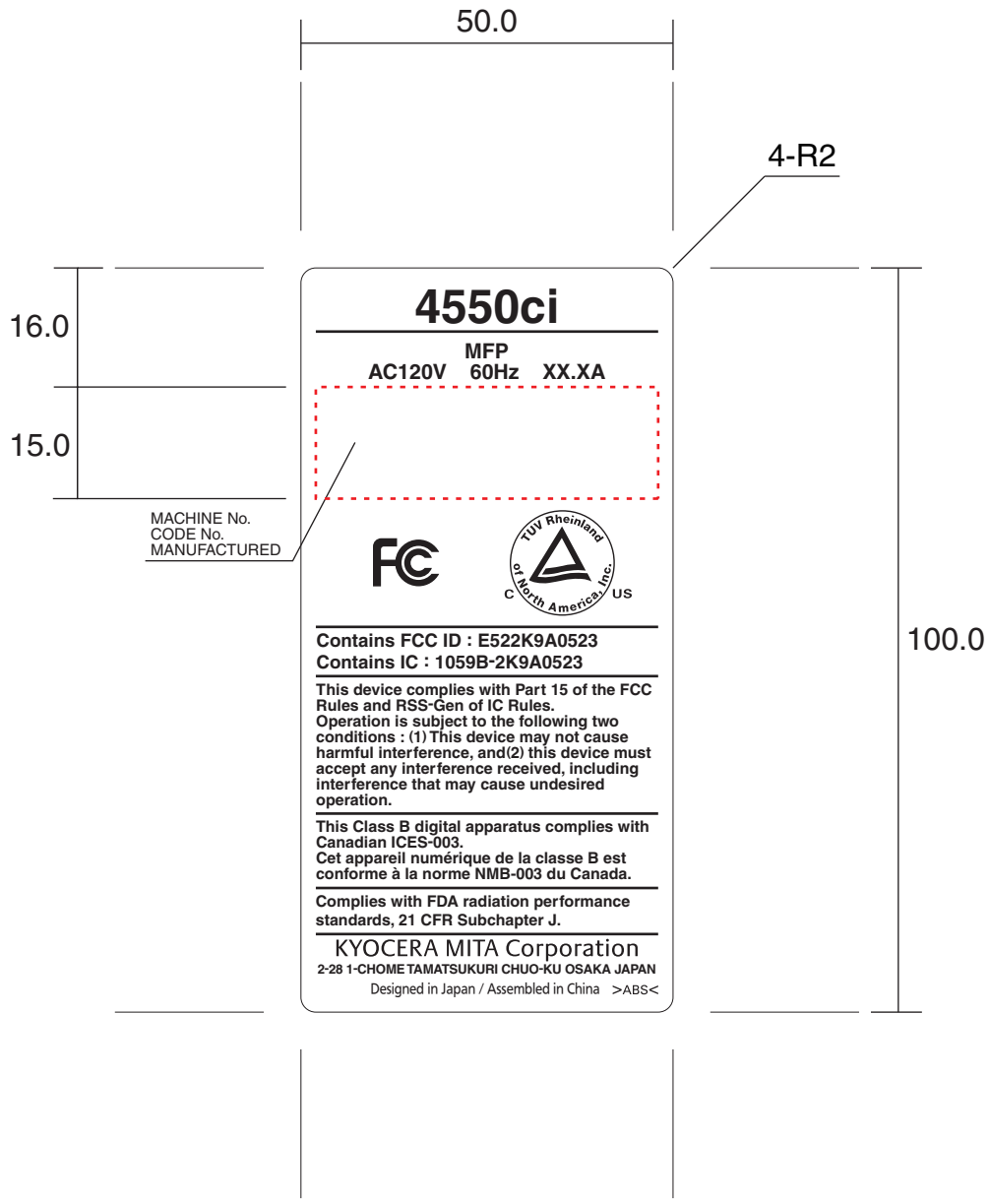
50.0
4-R2
16.0
15.0
100.0
MACHINE No.
CODE No.
MANUFACTURED
4550ci
MFP
AC120V 60Hz XX.XA
Contains FCC ID : E522K9A0523
Contains IC : 1059B-2K9A0523
This device complies with Part 15 of the FCC Rules and RSS-Gen of IC Rules.
Operation is subject to the following two conditions : (1) This device may not cause harmful interference, and(2) this device must accept any interference received, including interference that may cause undesired operation.
This Class B digital apparatus complies with Canadian ICES-003.
Cet appareil numérique de la classe B est conforme à la norme NMB-003 du Canada.
Complies with FDA radiation performance standards, 21 CFR Subchapter J.
KYOCERA MITA Corporation
2-28 1-CHOME TAMATSUKURI CHUO-KU OSAKA JAPAN
Designed in Japan / Assembled in China >ABS<

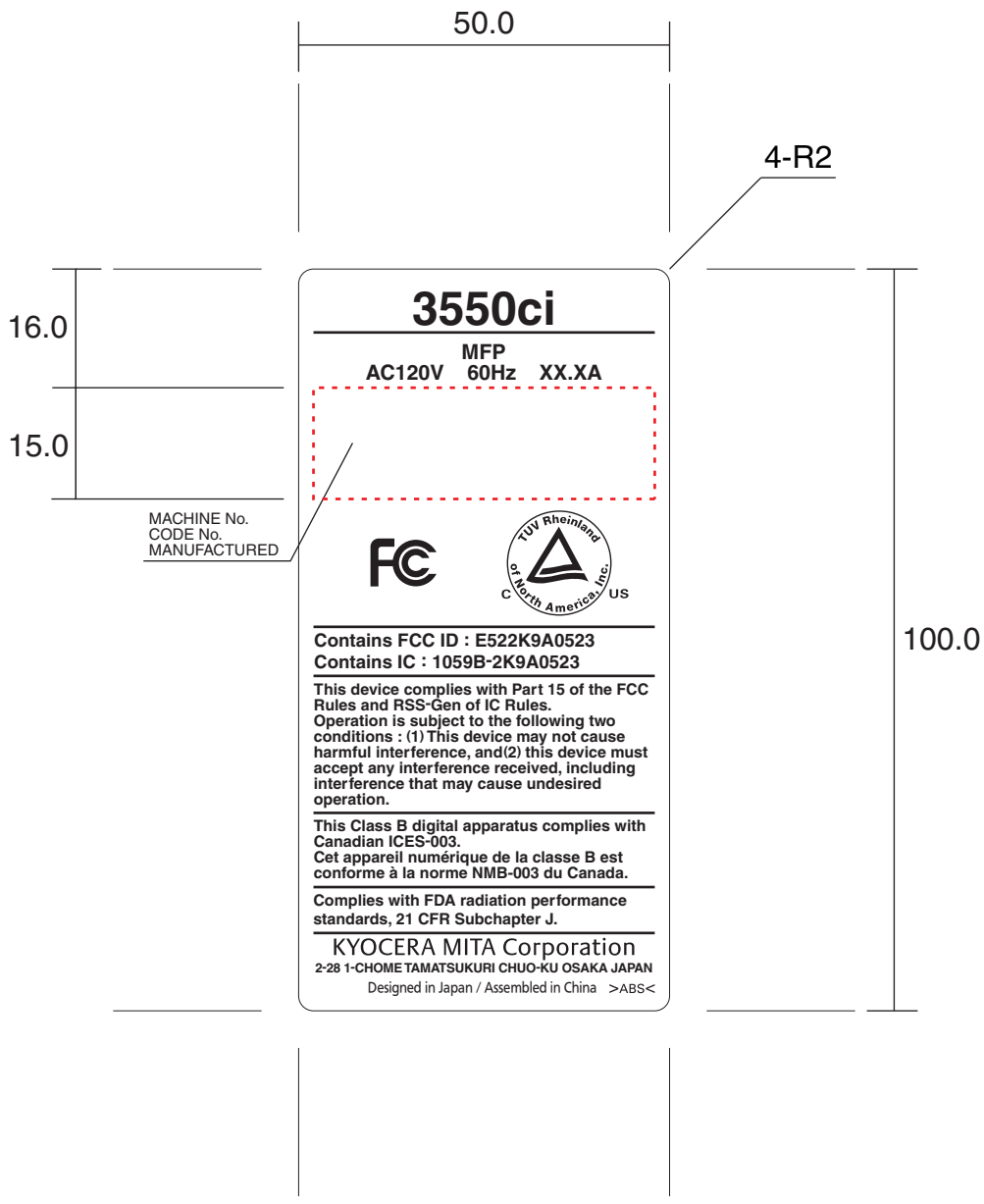
50.0
4-R2
16.0
15.0
100.0
MACHINE No.
CODE No.
MANUFACTURED
3550ci
MFP
AC120V 60Hz XX.XA
Contains FCC ID : E522K9A0523
Contains IC : 1059B-2K9A0523
This device complies with Part 15 of the FCC Rules and RSS-Gen of IC Rules.
Operation is subject to the following two conditions : (1) This device may not cause harmful interference, and(2) this device must accept any interference received, including interference that may cause undesired operation.
This Class B digital apparatus complies with Canadian ICES-003.
Cet appareil numérique de la classe B est conforme à la norme NMB-003 du Canada.
Complies with FDA radiation performance standards, 21 CFR Subchapter J.
KYOCERA MITA Corporation
2-28 1-CHOME TAMATSUKURI CHUO-KU OSAKA JAPAN
Designed in Japan / Assembled in China >ABS<

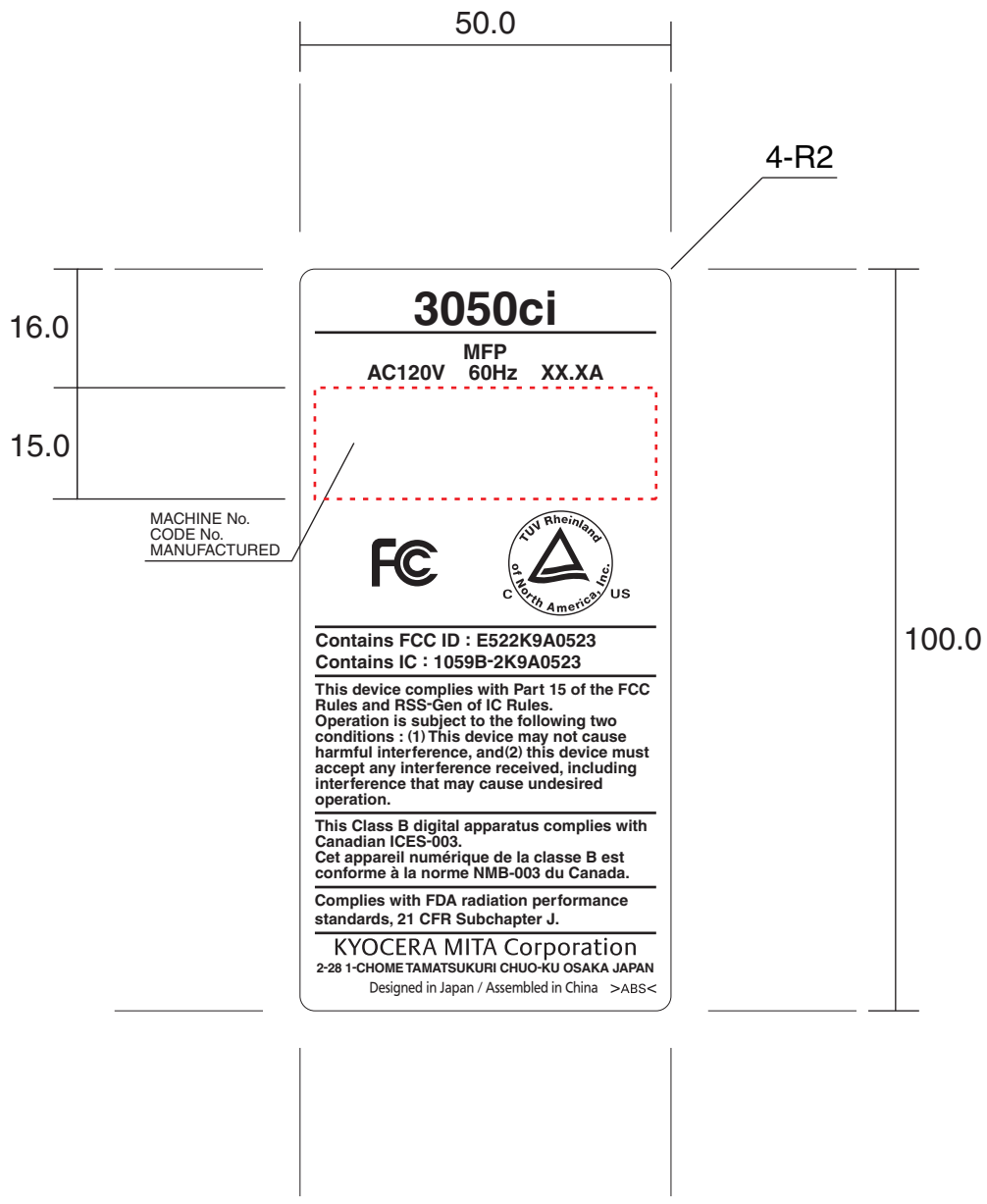
50.0
4-R2
16.0
15.0
100.0
MACHINE No.
CODE No.
MANUFACTURED
3050ci
MFP
AC120V 60Hz XX.XA
Contains FCC ID : E522K9A0523
Contains IC : 1059B-2K9A0523
This device complies with Part 15 of the FCC Rules and RSS-Gen of IC Rules.
Operation is subject to the following two conditions : (1) This device may not cause harmful interference, and(2) this device must accept any interference received, including interference that may cause undesired operation.
This Class B digital apparatus complies with Canadian ICES-003.
Cet appareil numérique de la classe B est conforme à la norme NMB-003 du Canada.
Complies with FDA radiation performance standards, 21 CFR Subchapter J.
KYOCERA MITA Corporation
2-28 1-CHOME TAMATSUKURI CHUO-KU OSAKA JAPAN
Designed in Japan / Assembled in China >ABS<