R-9000A

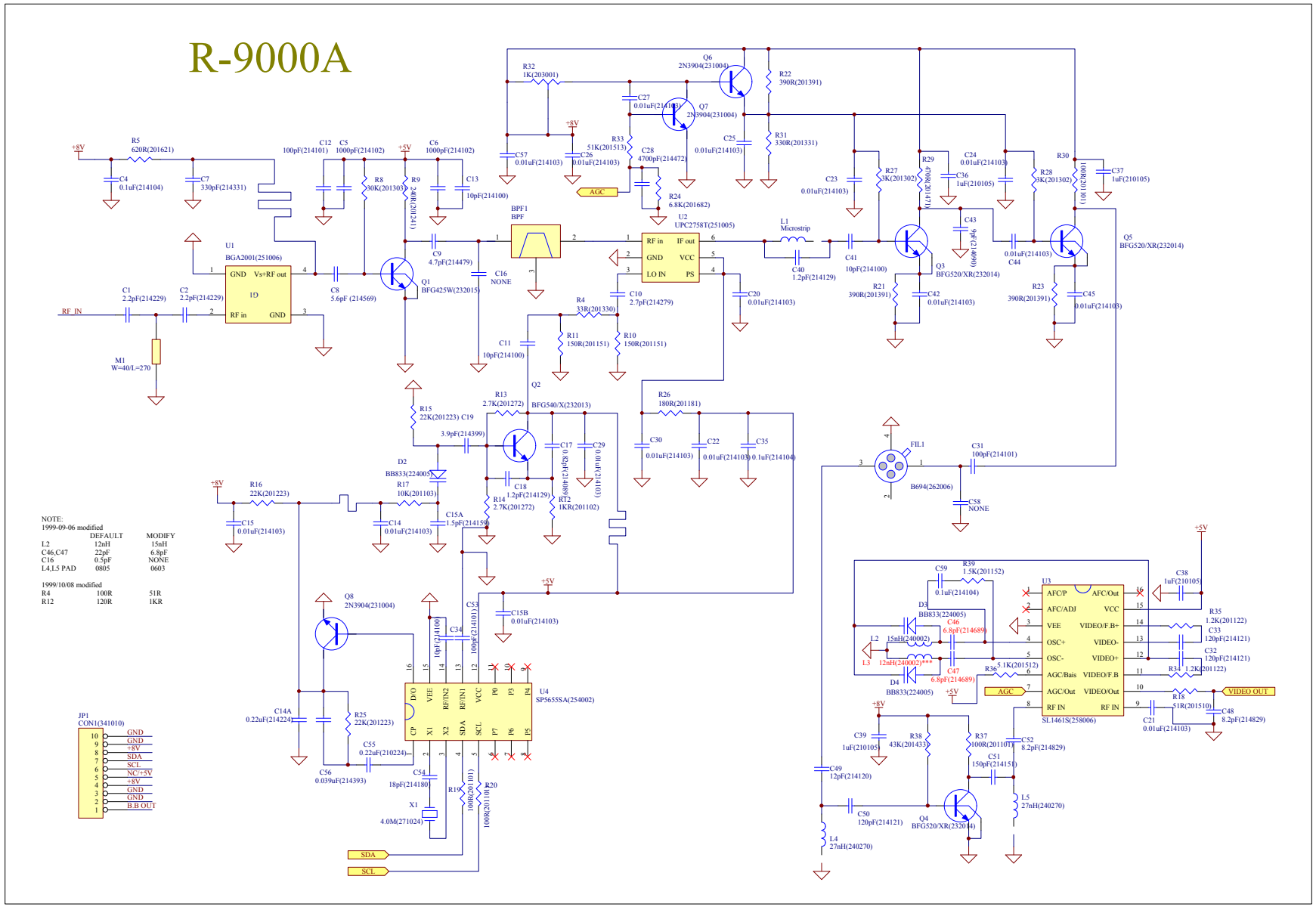

NOTE:
1999-09-06 modified

	DEFAULT	MODIFY
L2	12nH	15nH
C46,C47	22pF	6.8pF
C16	0.5pF	NONE
L4,L5 PAD	0805	0603

1999/10/08 modified

R4	100R	51R
R12	120R	1KR