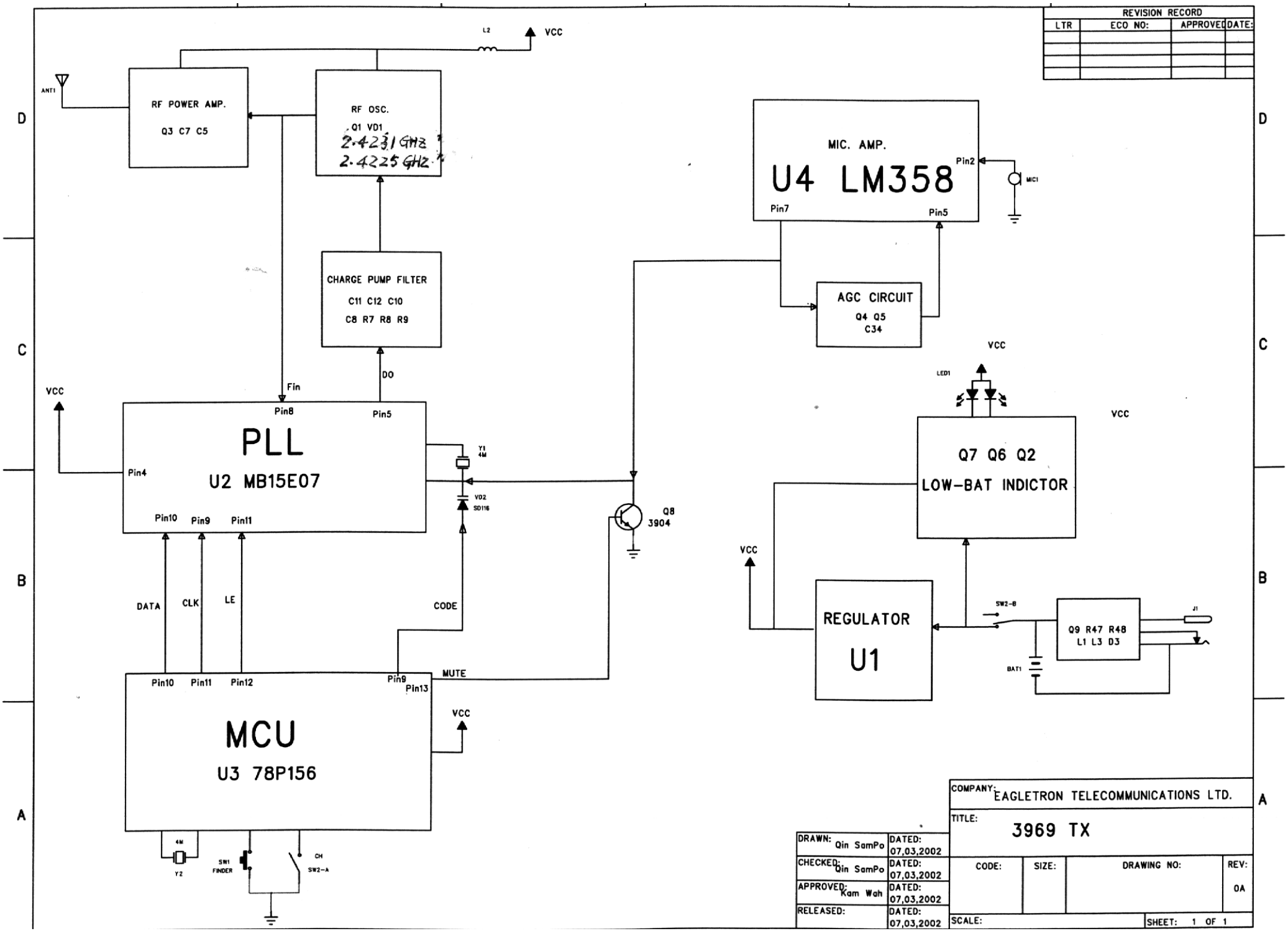
REVISION RECORD
LTR
ECO NO:
APPROVED
DATE:
L2
VCC
ANT1
RF POWER AMP.
Q3 C7 C5
RF OSC.
Q1 VD1
2.4231 GHz
2.4225 GHz
CHARGE PUMP FILTER
C11 C12 C10
C8 R7 R8 R9
DO
Fin
Pin8
Pin5
PLL
U2 MB15E07
Pin4
Pin10
Pin9
Pin11
Y1
4M
VD2
SD116
Q8
3904
DATA
CLK
LE
CODE
MUTE
Pin10
Pin11
Pin12
Pin9
Pin13
MCU
U3 78P156
4M
Y2
SW1
FINDER
CH
SW2-A
MIC. AMP.
U4 LM358
Pin2
Pin7
Pin5
MIC1
AGC CIRCUIT
Q4 Q5
C34
LED1
Q7 Q6 Q2
LOW-BAT INDICTOR
REGULATOR
U1
SW2-B
Q9 R47 R48
L1 L3 D3
J1
BAT1
COMPANY: EAGLETRON TELECOMMUNICATIONS LTD.
TITLE: 3969 TX
DRAWN: Qin SamPo
DATED: 07,03,2002
CHECKED: Qin SamPo
DATED: 07,03,2002
APPROVED: Kam Wah
DATED: 07,03,2002
RELEASED:
DATED: 07,03,2002
CODE:
SIZE:
DRAWING NO:
REV: 0A
SCALE:
SHEET: 1 OF 1