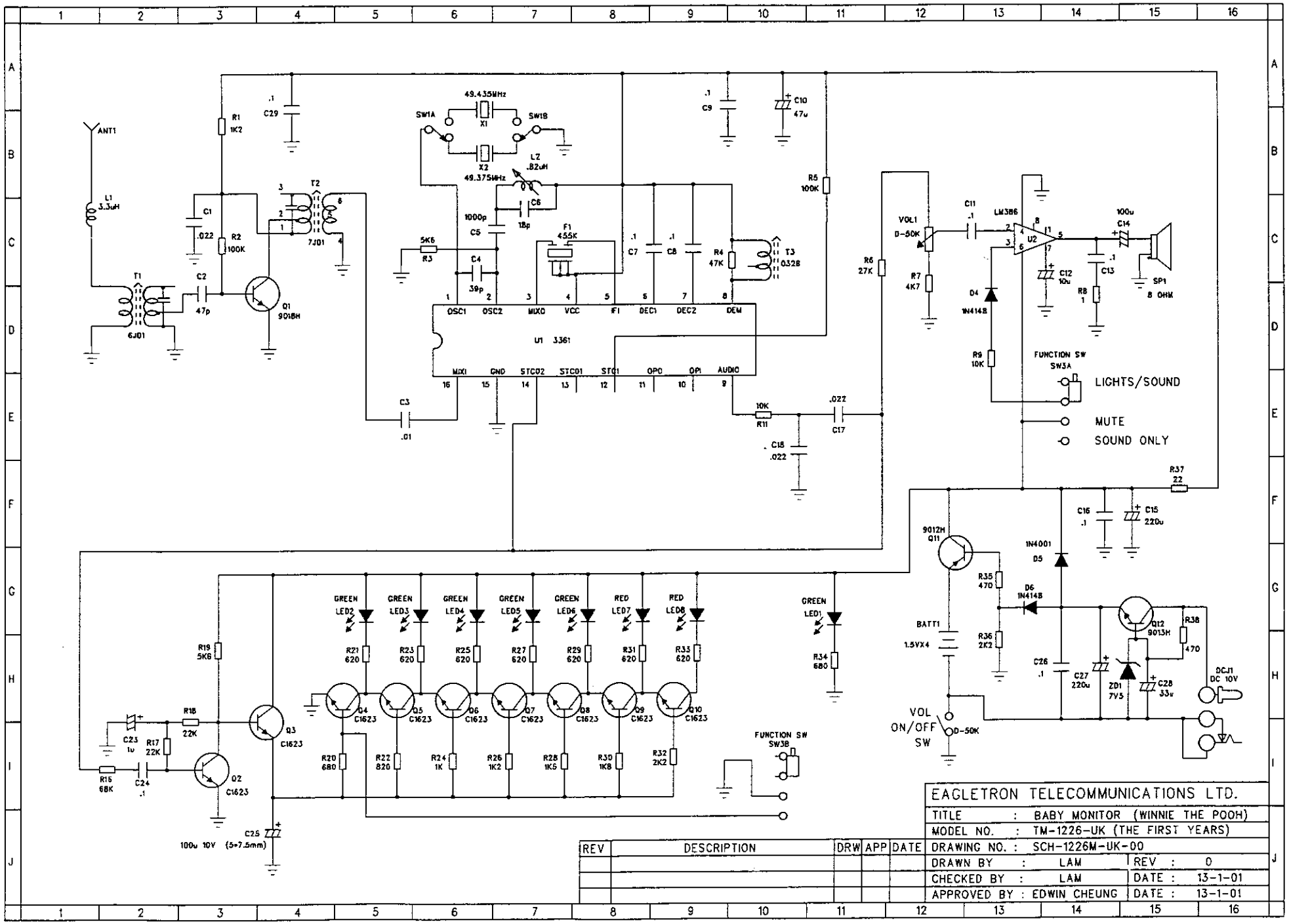
ANT1
L1 3.3uH
T1 6J01
C2 47p
C1 .022
R1 1K2
R2 100K
Q1 9018H
T2 7J01
C29 .1
49.435MHz X1
SW1A
SW1B
X2
49.375MHz
LZ .82uH
C6 18p
1000p C5
5K6 R3
C4 39p
F1 455K
C3 .01
U1 3361
OSC1 OSC2 MIXO VCC FI DEC1 DEC2 DEM
MIXI GND STCO2 STCO1 STCI OPO OPI AUDIO
C9 .1
C10 47u
C7 .1
C8 .1
R4 47K
T3 0328
R5 100K
R6 27K
10K R11
C18 .022
C17 .022
VOL1 D-50K
R7 4K7
C11 .1
LM386 U2
C12 10u
C13 .1
R8 1
100u C14
SP1 8 OHM
D4 1N4148
R9 10K
FUNCTION SW SW3A
LIGHTS/SOUND
MUTE
SOUND ONLY
R37 22
C16 .1
C15 220u
9012H Q11
1N4001 D5
R35 470
D6 1N4148
R36 2K2
BATT1 1.5VX4
C26 .1
C27 220u
Q12 9013H
R38 470
ZD1 7V5
C28 33u
DCJ1 DC 10V
VOL ON/OFF SW D-50K
GREEN LED2 R21 620 Q4 C1623
GREEN LED3 R23 620 Q5 C1623
GREEN LED4 R25 620 Q6 C1623
GREEN LED5 R27 620 Q7 C1623
GREEN LED6 R29 620 Q8 C1623
RED LED7 R31 620 Q9 C1623
RED LED8 R33 620 Q10 C1623
GREEN LED1 R34 680
R20 680
R22 820
R24 1K
R26 1K2
R28 1K5
R30 1K8
R32 2K2
FUNCTION SW SW3B
R19 5K6
R18 22K
Q3 C1623
C23 1u
R17 22K
R16 68K
C24 .1
Q2 C1623
C25 100u 10V (5*7.5mm)
EAGLETRON TELECOMMUNICATIONS LTD.
TITLE : BABY MONITOR (WINNIE THE POOH)
MODEL NO. : TM-1226-UK (THE FIRST YEARS)
DRAWING NO. : SCH-1226M-UK-00
DRAWN BY : LAM
REV : 0
CHECKED BY : LAM
DATE : 13-1-01
APPROVED BY : EDWIN CHEUNG
DATE : 13-1-01
REV DESCRIPTION DRW APP DATE