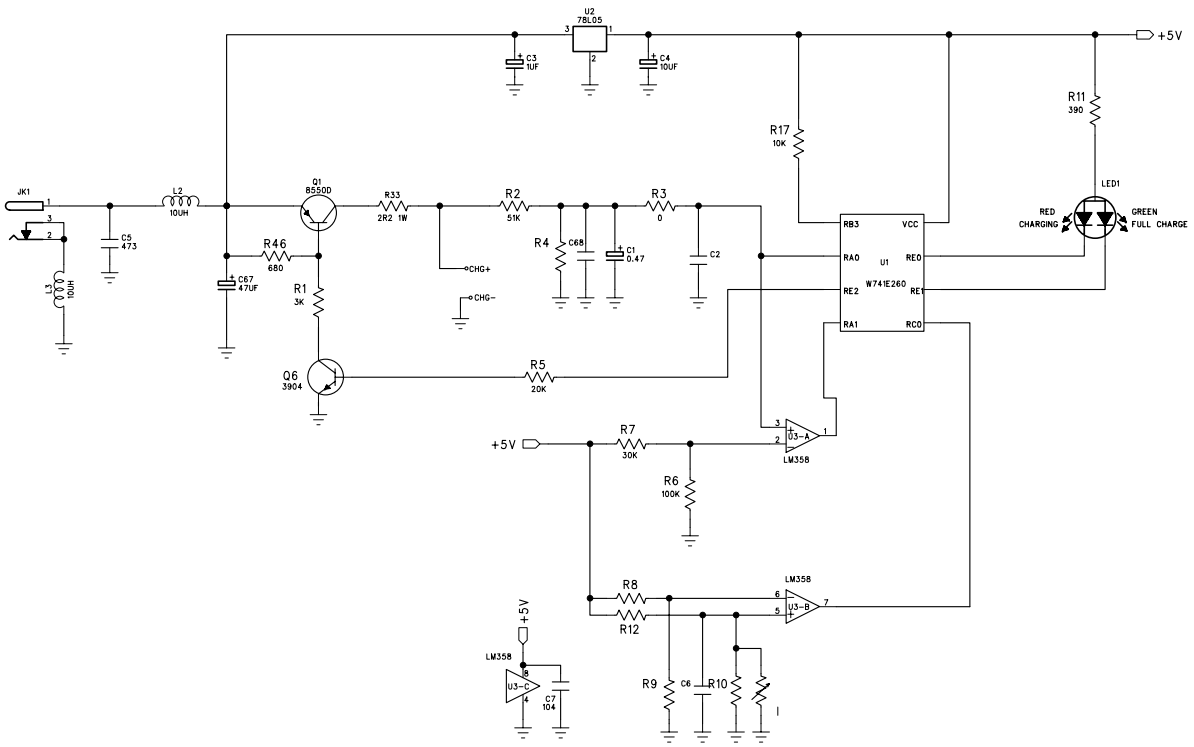

EAGLETRON TELECOMMUNICATIONS LTD.			
TITLE :	3809 TX CHARGE BASE		
MODEL NO. :	TFY-3809T-USA		
DRAWING NO. :	TFY-3809T-USA-00	REV :	0
DRAWN BY :	H.N.YANG	DATE :	2003.04.24
CHECKED BY :	H.N.YANG		
APPROVED BY :	KAMWA	DATE :	2003.7.12

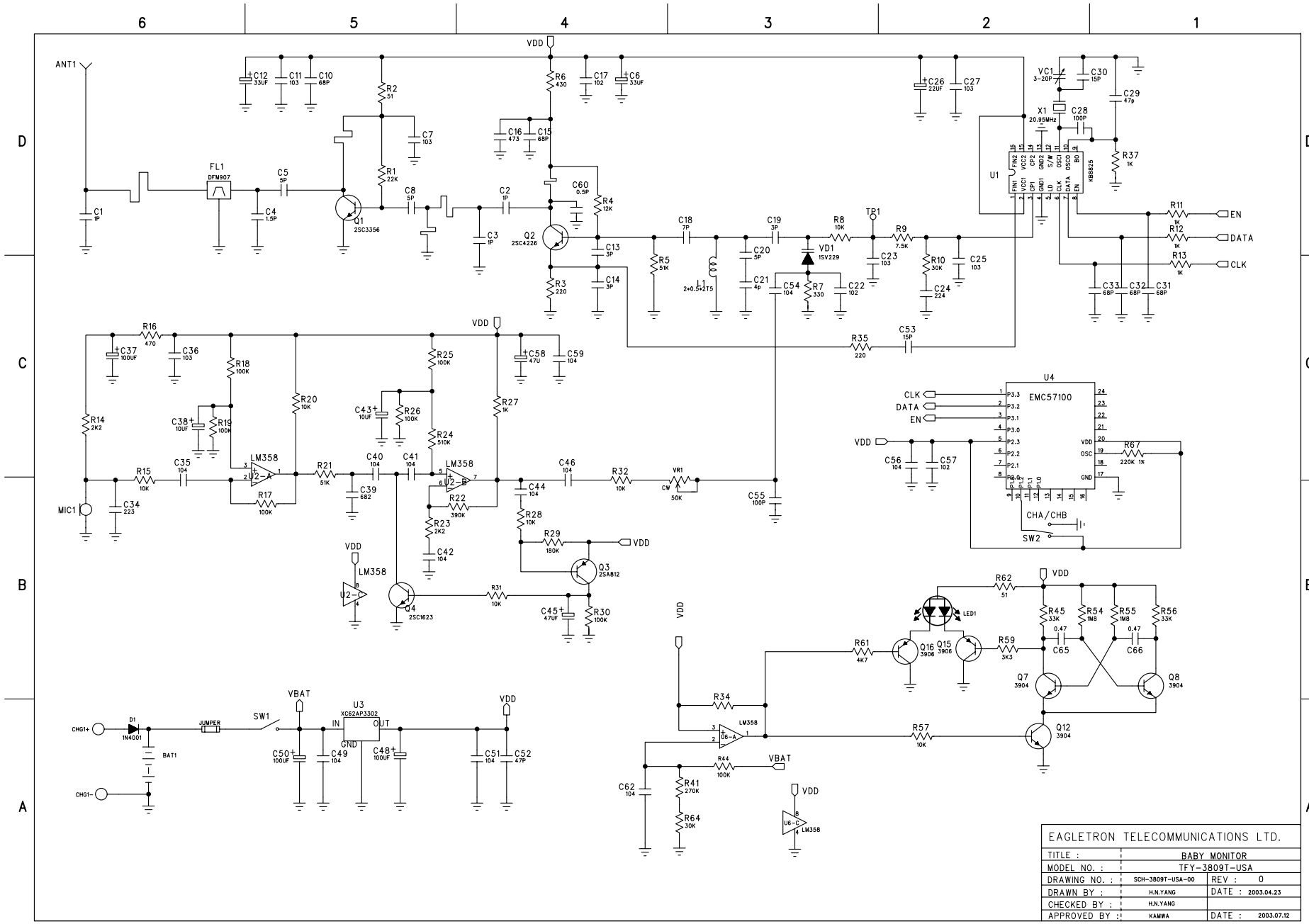

EAGLETRON TELECOMMUNICATIONS LTD.		
TITLE :	BABY MONITOR	
MODEL NO. :	TFY-3809T-USA	
DRAWING NO. :	SCH-3809T-USA-00	REV : 0
DRAWN BY :	H.N.YANG	DATE : 2003.04.23
CHECKED BY :	H.N.YANG	
APPROVED BY :	KAMWA	DATE : 2003.07.12