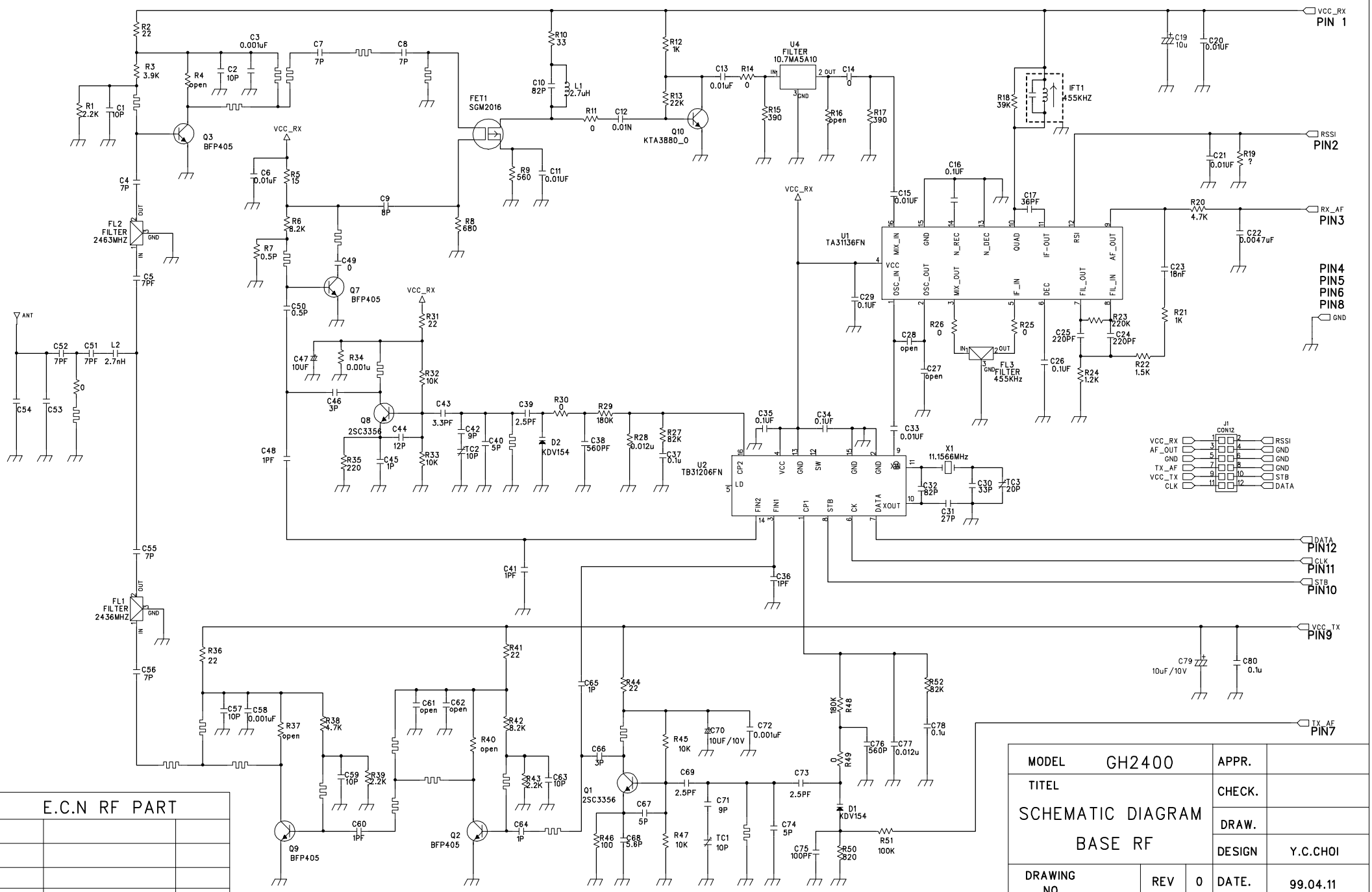

E.C.N RF PART		

MODEL	GH2400	APPR.	
TITEL	SCHEMATIC DIAGRAM BASE RF	CHECK.	
		DRAW.	
		DESIGN	Y.C.CHOI
DRAWING NO	REV 0	DATE.	99.04.11
FOCUS ELETRONIC Co.		SHEET	1 of 1