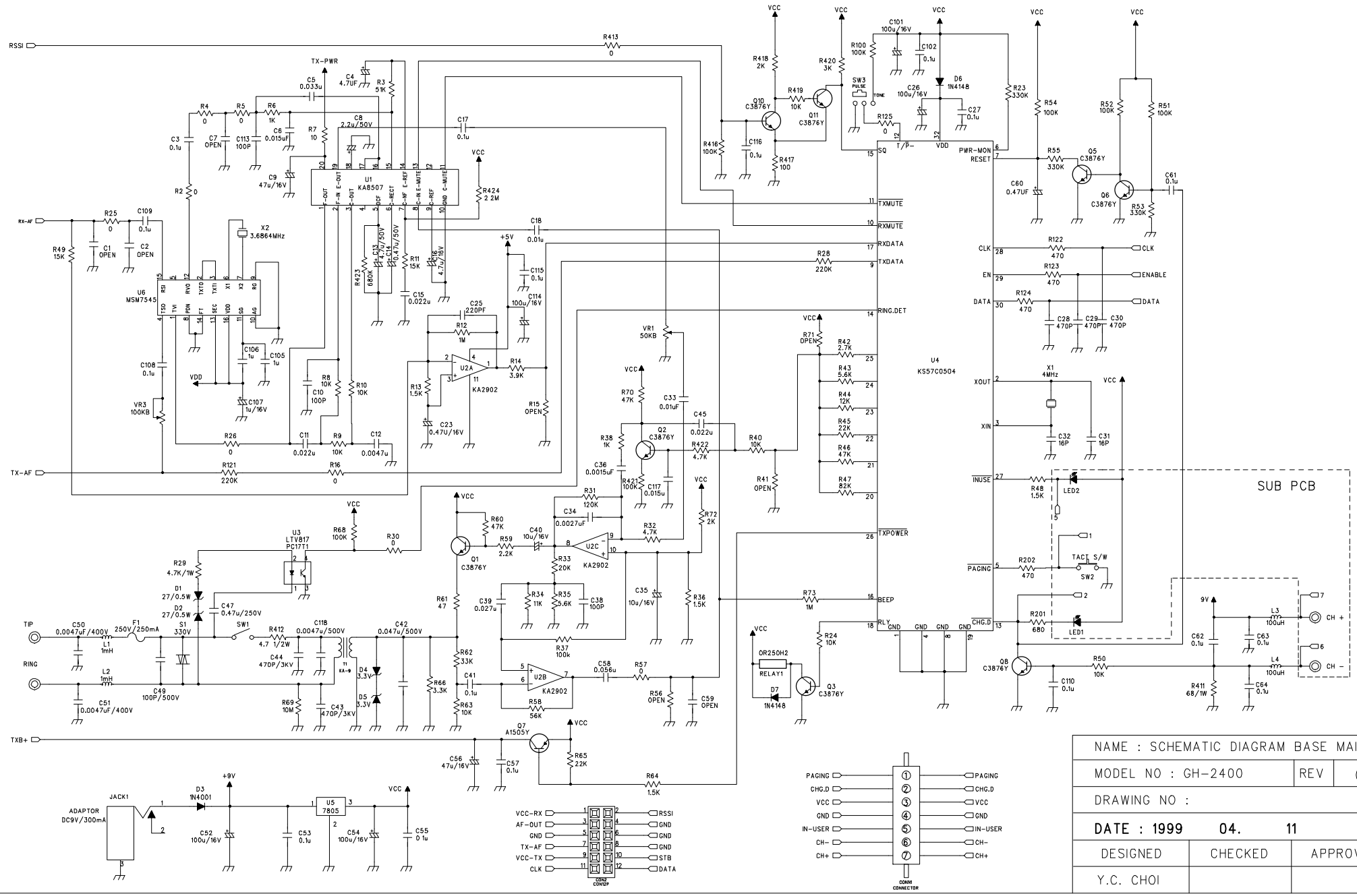

NAME : SCHEMATIC DIAGRAM BASE MAIN		
MODEL NO : GH-2400	REV	0
DRAWING NO :		
DATE : 1999 04. 11		
DESIGNED	CHECKED	APPROVED
Y.C. CHOI		