DESCRIPTION: IEM Transmitter Audio / RF (P S M 700).....P7Td.sch

DRWG. NO. TRANSL.SCH

SHEET NO. 1 OF 1 SHEETS

ORIG. ISSUED

ISSUE	RECORD OF CHANGES MADE
1	
2	
3	
4	

All corresponding AC and DC values listed for the right channel are the same for the left channel.

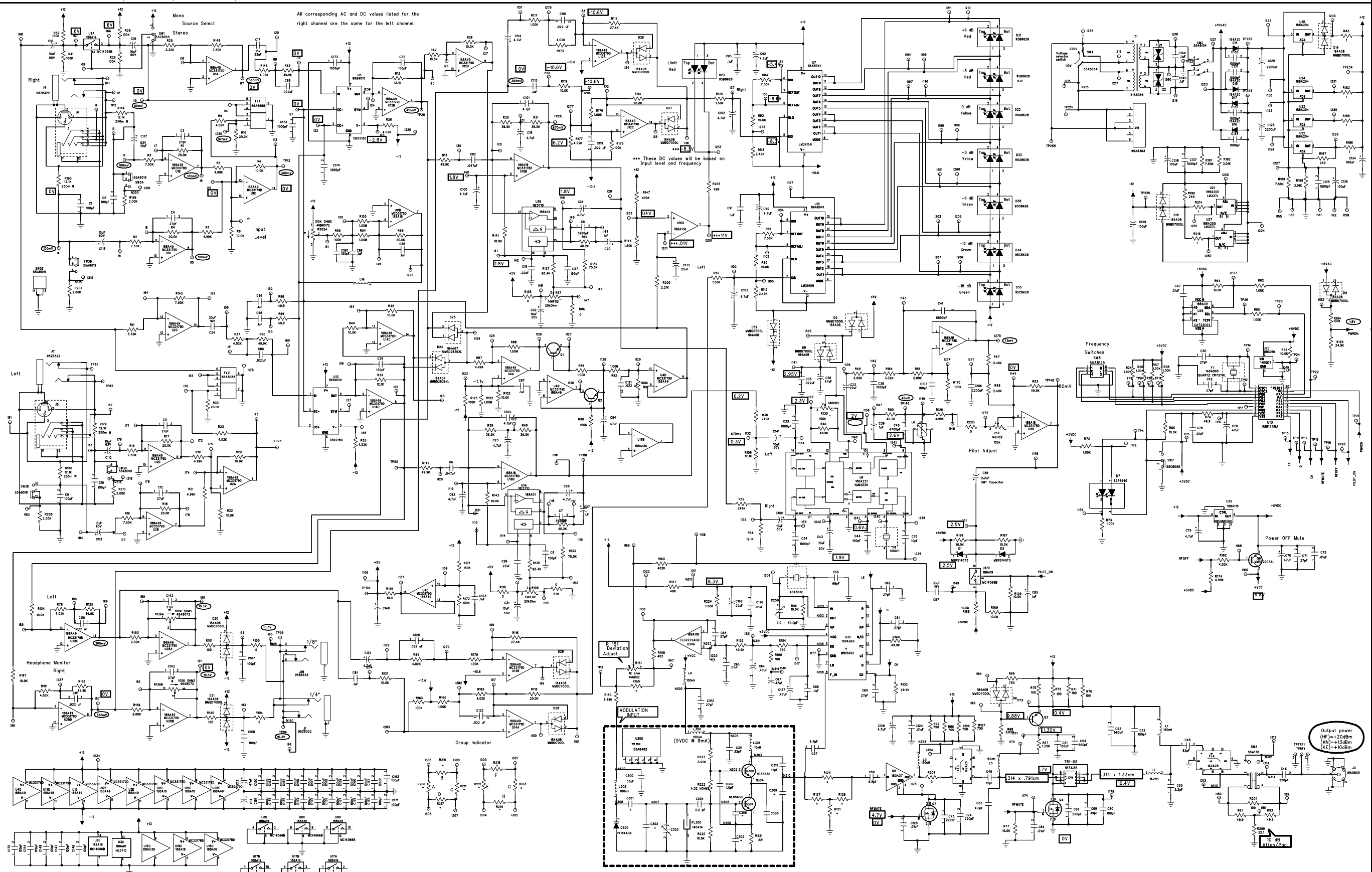

NOTES:

1. All resistors 1/10 Watt, 1%, 0805 unless otherwise specified.
2. Electrolytic capacitors shown in uF x Volts. All non-polar capacitors in uF, tolerance 10% and 50V or more unless otherwise specified.
3. The following symbols denote:

15mV A.C. Voltage | P.C. ground
15mV D.C. Voltage | Chassis ground

	FREQ.RANGE	C301	C302	C306	C305	C309	R131	R124	R127	R128	R159	R206	R216	R111	R217 R212 R218 R213 R219	TUNING VOLTAGE (VT)
GROUP A 90A8809A	HF-VERSION (722-746)MHz	150GB568BA 5.6pF	150GB108BA 1.0pF	150GB478BA 4.7pF	150GB2288BA 2.2pF	150GB478BA 4.7pF	Not placed	145BJ0000 0-ohms	145BJ0000 0-ohms	145BJ0000 0-ohms	145BF49R9 Not placed	145BJ000 0-ohms	Not placed	Not placed	Not placed	f=722.325MHz) (VT=1.5Vdc)
GROUP B 90B8809A	MN-VERSION (800-830)MHz	150GB398BA 3.9pF	Not placed	150GB338BA 3.3pF	150GB108BA 1pF	150GB228BA 2.2Pf	145BF22R1 22.1ohms	145BF1500 150ohms	145BF49R9 49.9ohms	145BF49R9 49.9ohms	Not placed	Not placed	145BJ000 0-ohms	Not placed	Not placed	
GROUP C 90C8809A	KE-VERSION (858-864)MHz	150GB398BA 3.9pF	Not placed	150GB338BA 3.3pF	150GB108BA 1pF	150GB228BA 2.2Pf	145BF22R1 22.1ohms	145BF1500 150ohms	145BF49R9 49.9ohms	145BF49R9 49.9ohms	Not placed	Not placed	Not placed	145BJ000 0-ohms	Not placed	

Table 1

NOTICE

This drawing is the property of Shure Brothers Incorporated and is disclosed to you in strict confidence and with the understanding that it is not to be reproduced, copied, or used except for the purpose of producing tools or products exclusively for Shure Brothers Incorporated. Copies of this drawing are to be made only when necessary for the purpose stated above and all copies must contain this Notice. This drawing and all copies must be returned on request.

222 HARTREY AVE.
EVANSTON, IL 60202
PHONE 708-866-2200

Microphones - Electronic Components

DRAWN A. HARTMAN 5/18/96
A.VOUKIDIS 10/20/98

CHECKED

APPROVED

APPROVED

DRWG. NO. MYPRINT-11