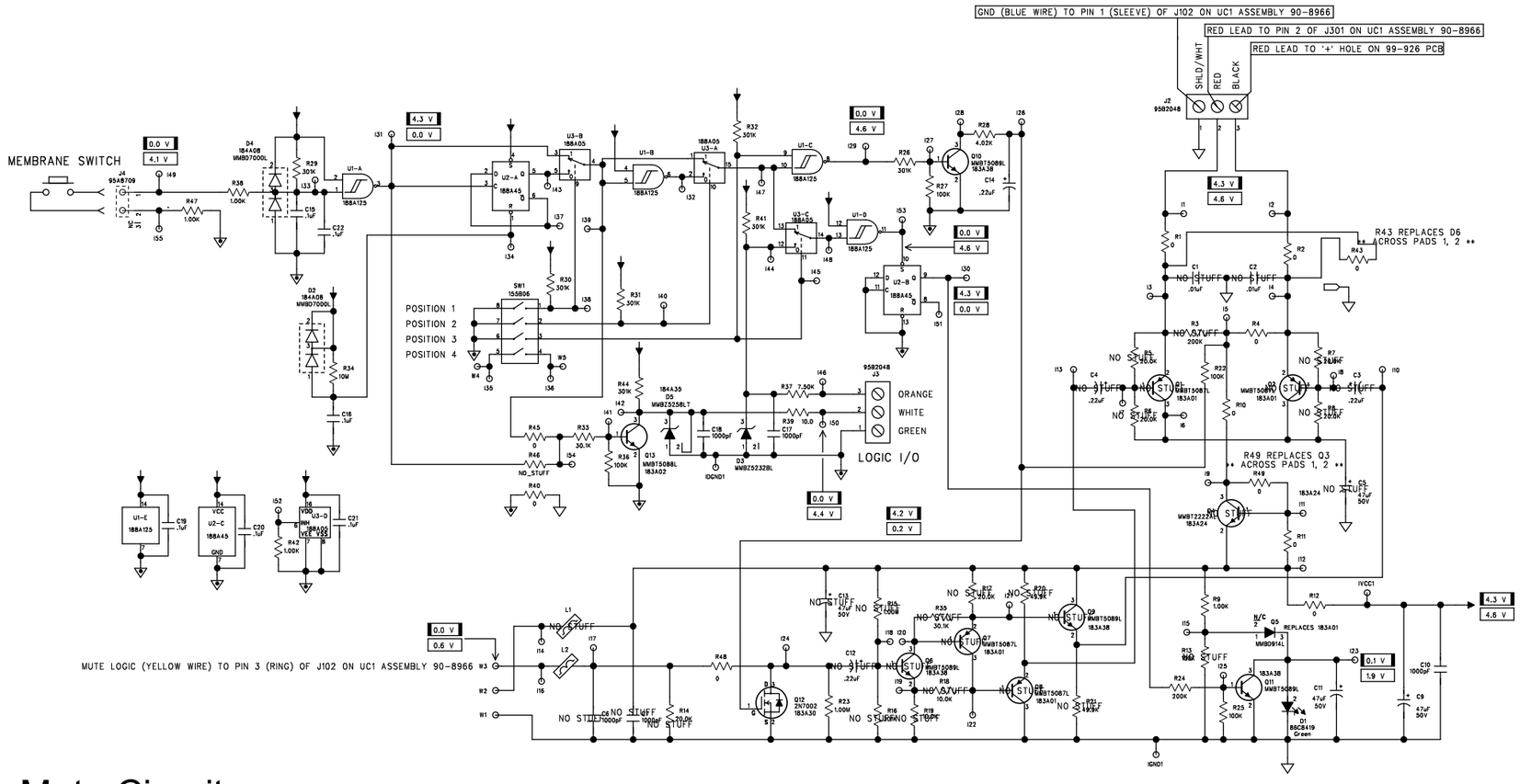

Mute Circuitry

RF Circuitry

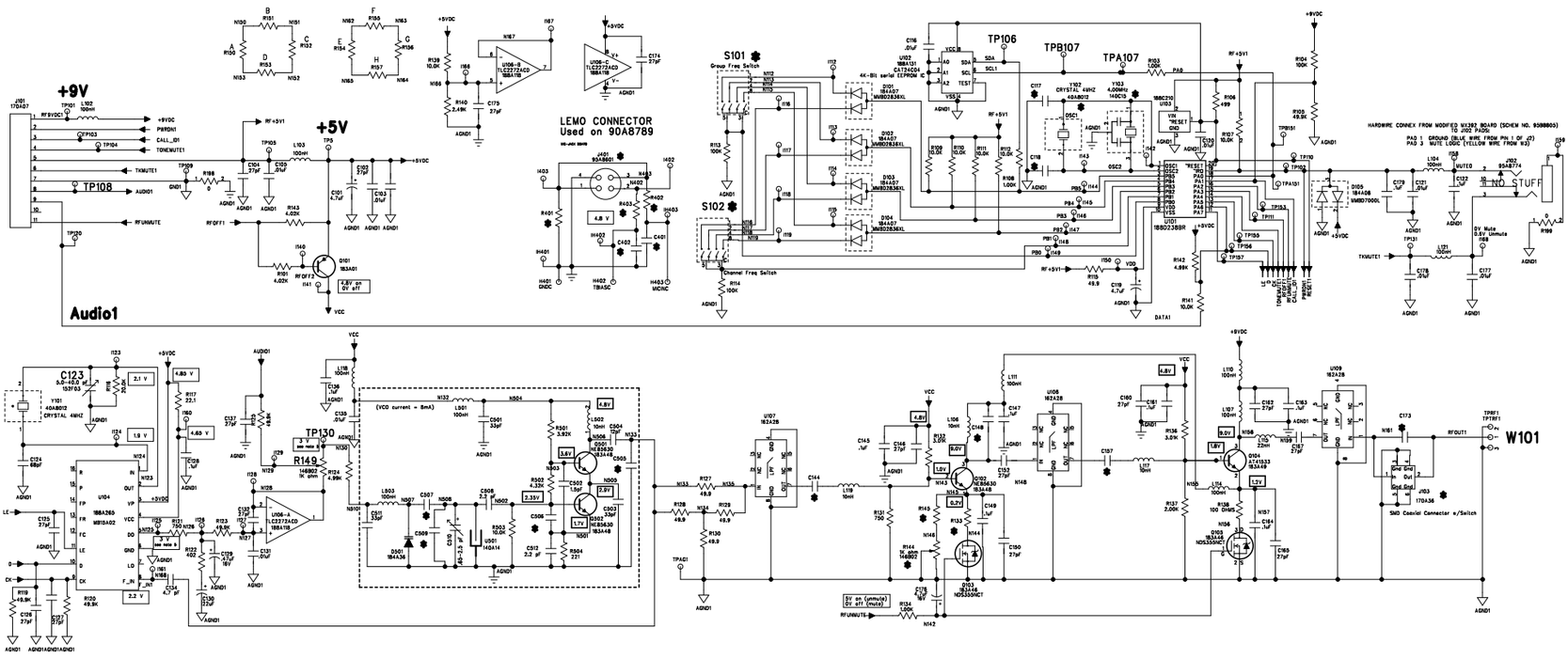

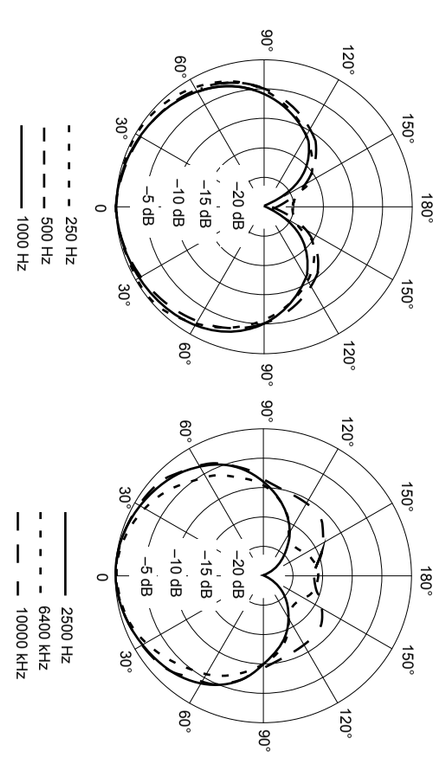

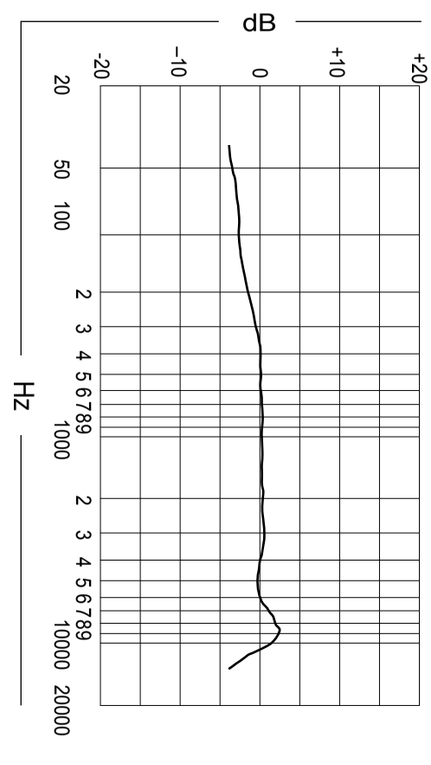

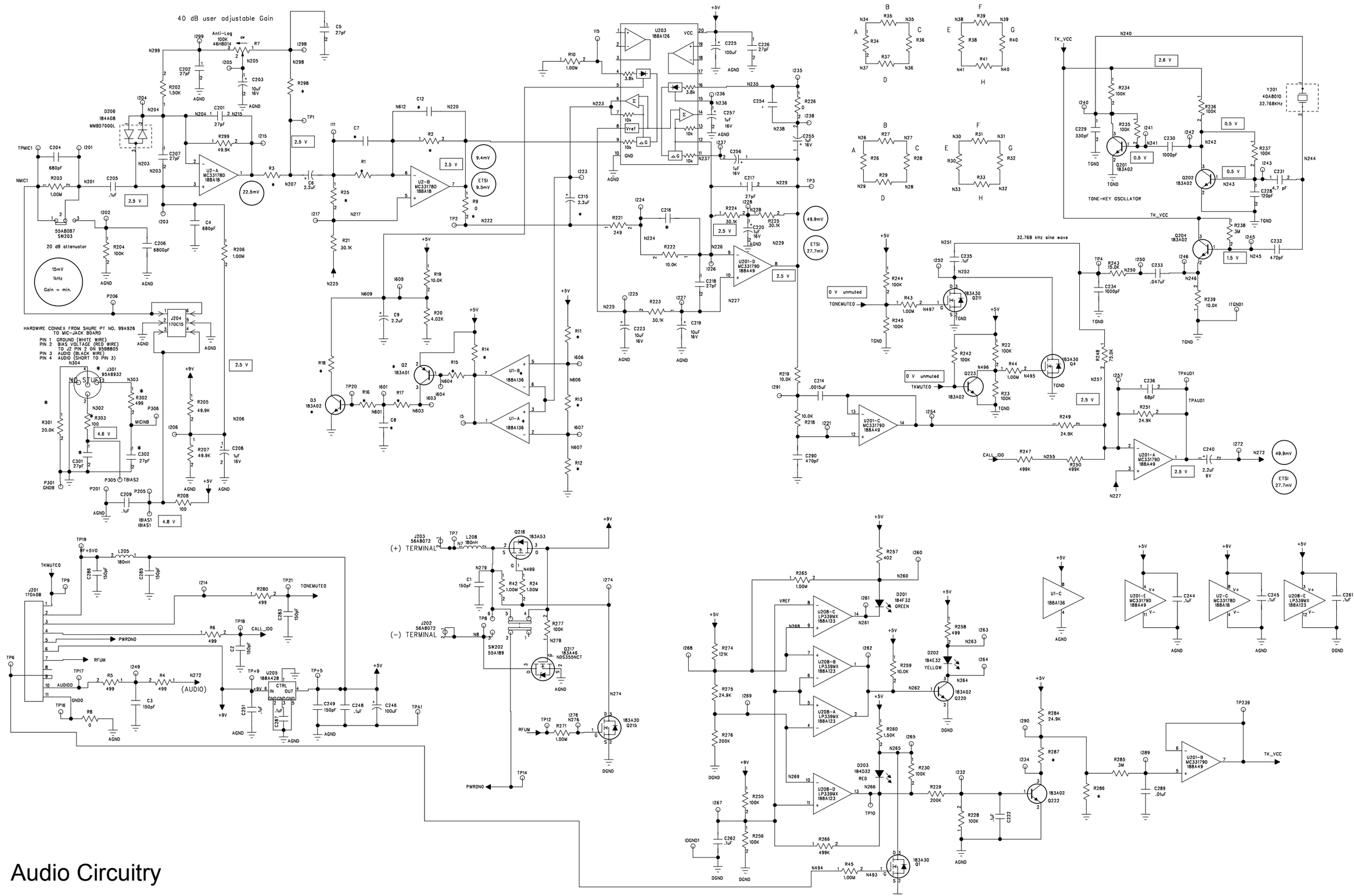
40 dB user adjustable Gain
20 dB attenuator
HARDWIRE CONNEX FROM SHURE PT NO. 99A926 TO MIC-JACK BOARD
PIN 1 GROUND (WHITE WIRE)
PIN 2 BIAS VOLTAGE (RED WIRE) TO J2 PIN 2 ON 95B8805
PIN 3 AUDIO (BLACK WIRE)
PIN 4 AUDIO (SHORT TO PIN 3)
NO STUBS
TONE-KEY OSCILLATOR
32.768 kHz sine wave
(AUDIO)
(+) TERMINAL
(-) TERMINAL
Audio Circuitry