PULSE ELECTRONICS: CXY-15616
BLOCK DIAGRAM 2.983 (d)(6)

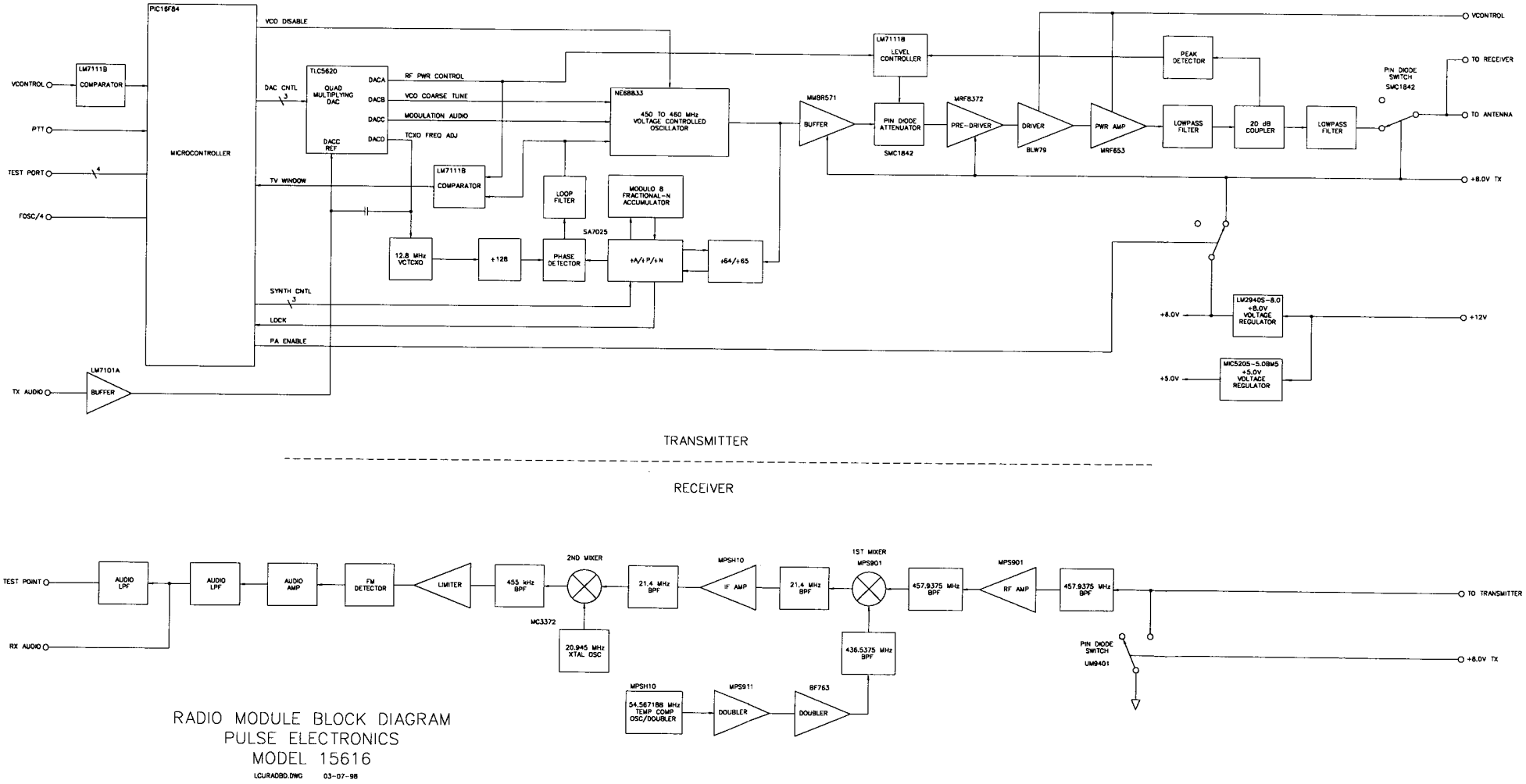

TRANSMITTER

RECEIVER

RADIO MODULE BLOCK DIAGRAM
PULSE ELECTRONICS
MODEL 15616
LCURADBD.DWG 03-07-98