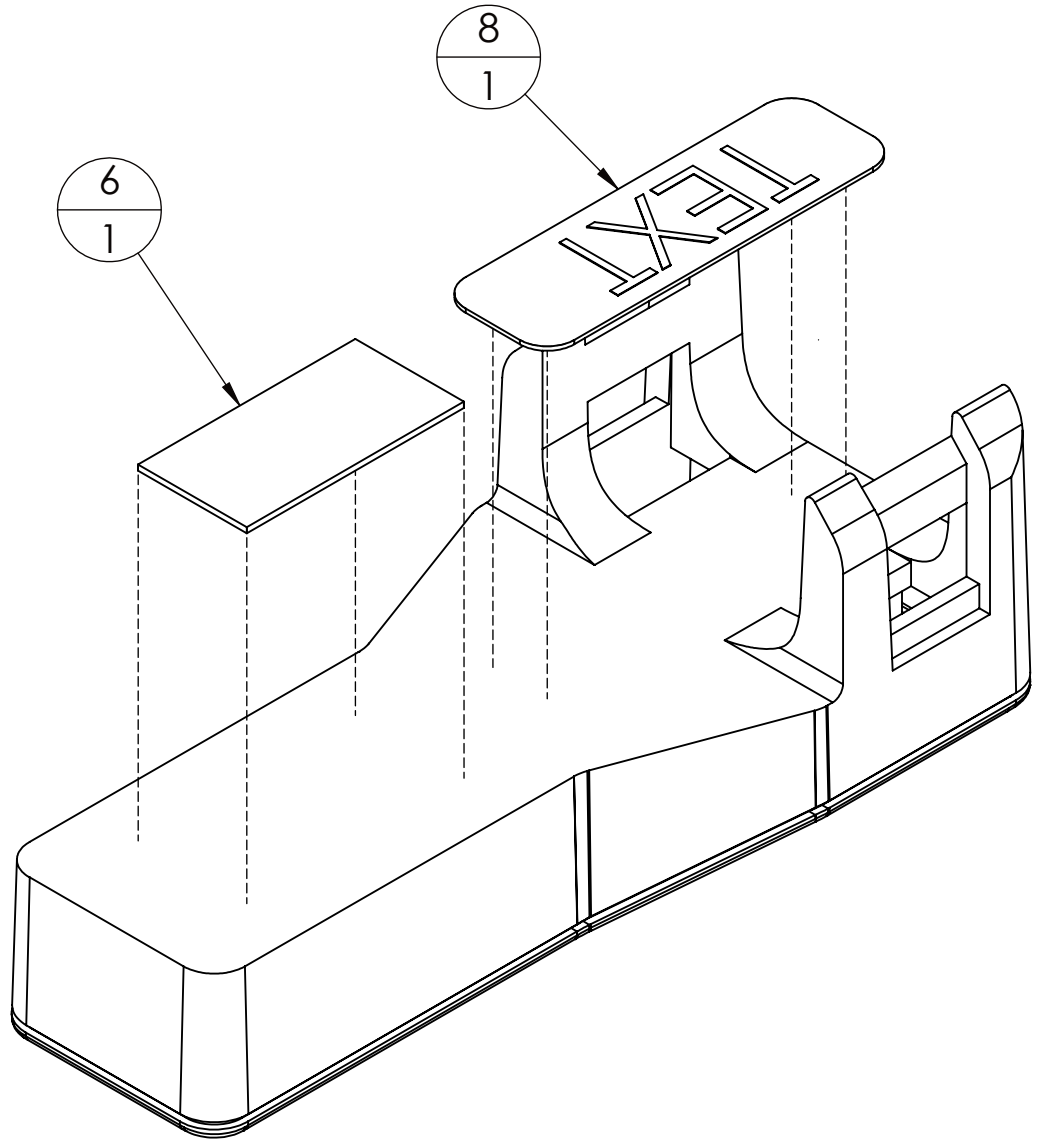
8
1
6
1
TEXT