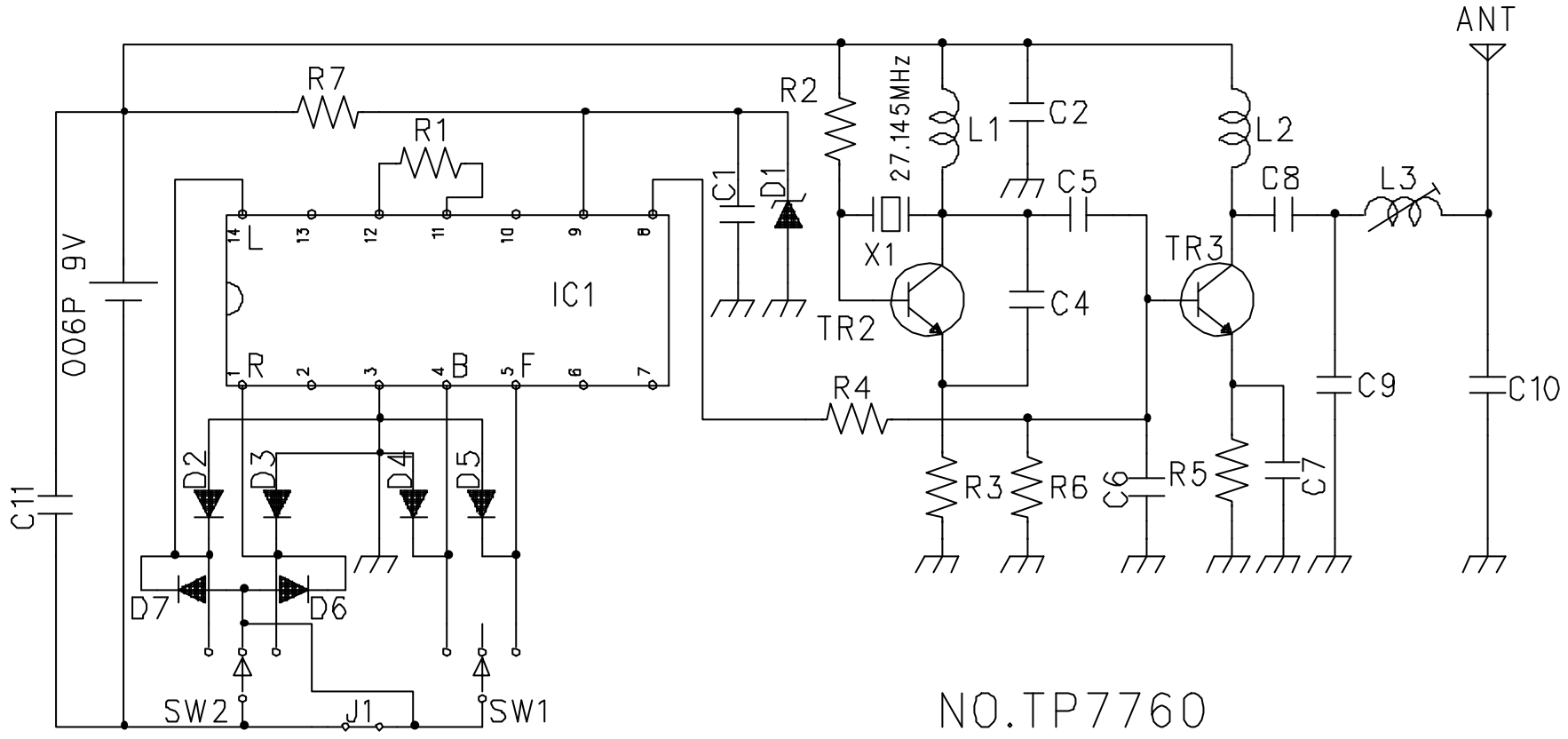

NO.TP7760
CIRCUIT DIAGRAM

FCC ID:CVTTP7760