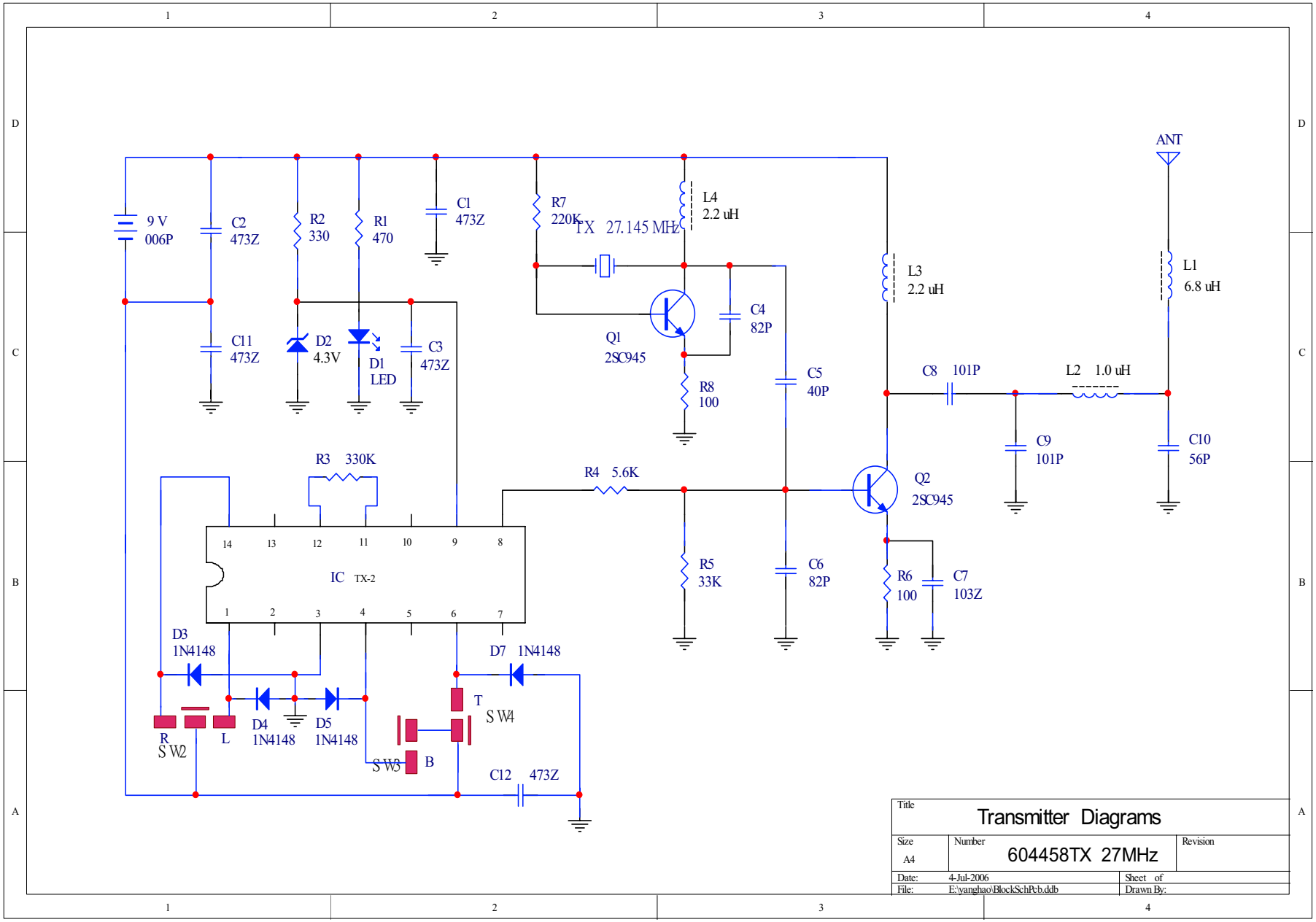
9 V
006P
C2
473Z
R2
330
R1
470
C1
473Z
R7
220K
TX 27.145 MHz
L4
2.2 uH
ANT
L3
2.2 uH
L1
6.8 uH
C11
473Z
D2
4.3V
D1
LED
C3
473Z
Q1
2SC945
C4
82P
R8
100
C5
40P
C8 101P
L2 1.0 uH
C9
101P
C10
56P
R3 330K
R4 5.6K
Q2
2SC945
IC TX-2
R5
33K
C6
82P
R6
100
C7
103Z
D3
1N4148
D7 1N4148
R
S W2
L
D4
1N4148
D5
1N4148
T
S W4
S W3
B
C12 473Z
Title
Transmitter Diagrams
Size
A4
Number
604458TX 27MHz
Revision
Date: 4-Jul-2006
Sheet of
File: E:\yanghao\BlockSchPcb.ddb
Drawn By: