LTR	REVISIONS	ECO NO.	DATE	BY
A	RELEASE	1430	9/20/06	LJH

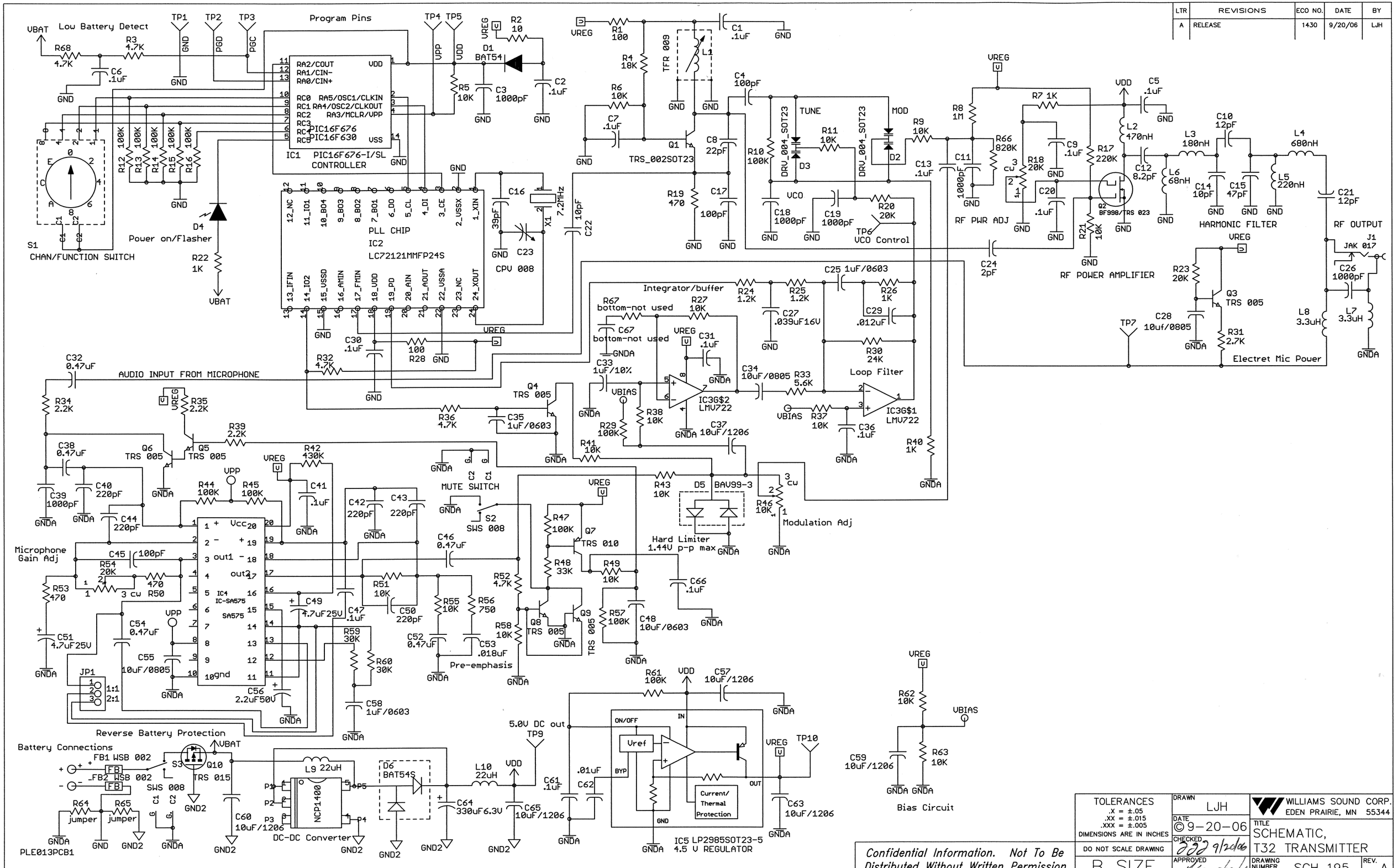

TOLERANCES
.X = ±.05
.XX = ±.005
.XXX = ±.005
DIMENSIONS ARE IN INCHES
DO NOT SCALE DRAWING

B SIZE

DRAWN LJH
DATE © 9-20-06
CHECKED 9/20/06
APPROVED 9/22/06

WILLIAMS SOUND CORP.
EDEN PRAIRIE, MN 55344

TITLE SCHEMATIC, T32 TRANSMITTER

DRAWING NUMBER SCH 195 REV. A

Confidential Information. Not To Be Distributed Without Written Permission