MITSUMI

Mitsumi Electric Co. Ltd
8-8-2 Kokuryo-cho, Chofu-shi, Tokyo 182, Japan
Tel +81-3-3489-5333 Fax:+81-3-3430-9096

Circuit Diagram

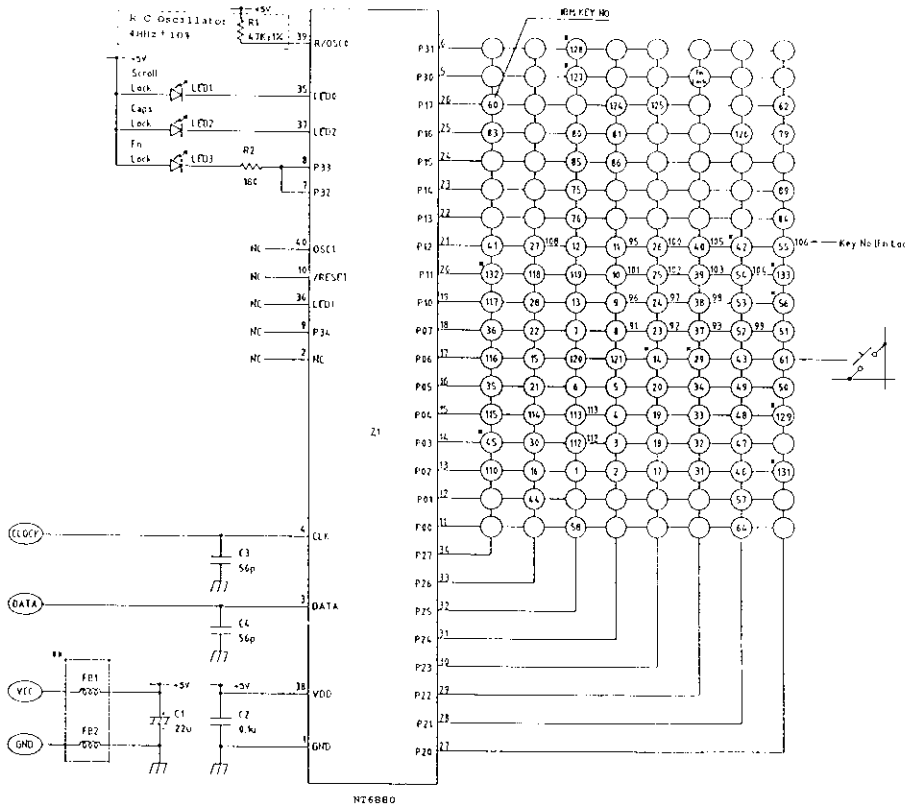

*: These keys are used only in each model
07K/B (KEY NO.29)
08K/B (KEY NO.42,43)
92K/B (KEY NO.14,42,56,130,132,133)

*: 3 NEW KEYS for Windows
(KEY NO.127: Left Windows
KEY NO.128: Right Windows
KEY NO.129: Applications)

**: FB1,FB2 are EMI optional parts.

SYMBOL	PARTS LIST
R2	180Ω ±5%
FB1,FB2	TDK HF50ACB453215-4-50
LED1~LED3	LED
C3,C4	Cer.Capacitor 56pF 50V
C2	Cer.Capacitor 0.1uF 16V
C1	E.Capacitor 22uF 16V
R1	4.7kΩ ±1%
Z1	N76880

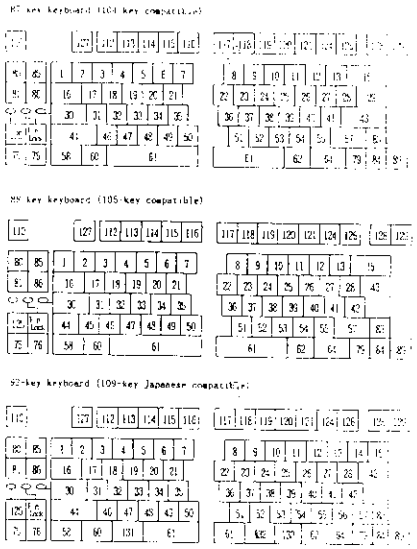

Issued : September 3, 1998

MITSUMI

Mitsumi Electric Co.,Ltd
8-8-2 Kokuryo-cho Chofu-shi, Tokyo 182,Japan
Tel +81 3 3489-5333 Fax +81 3 3430 9006

Circuit Diagram

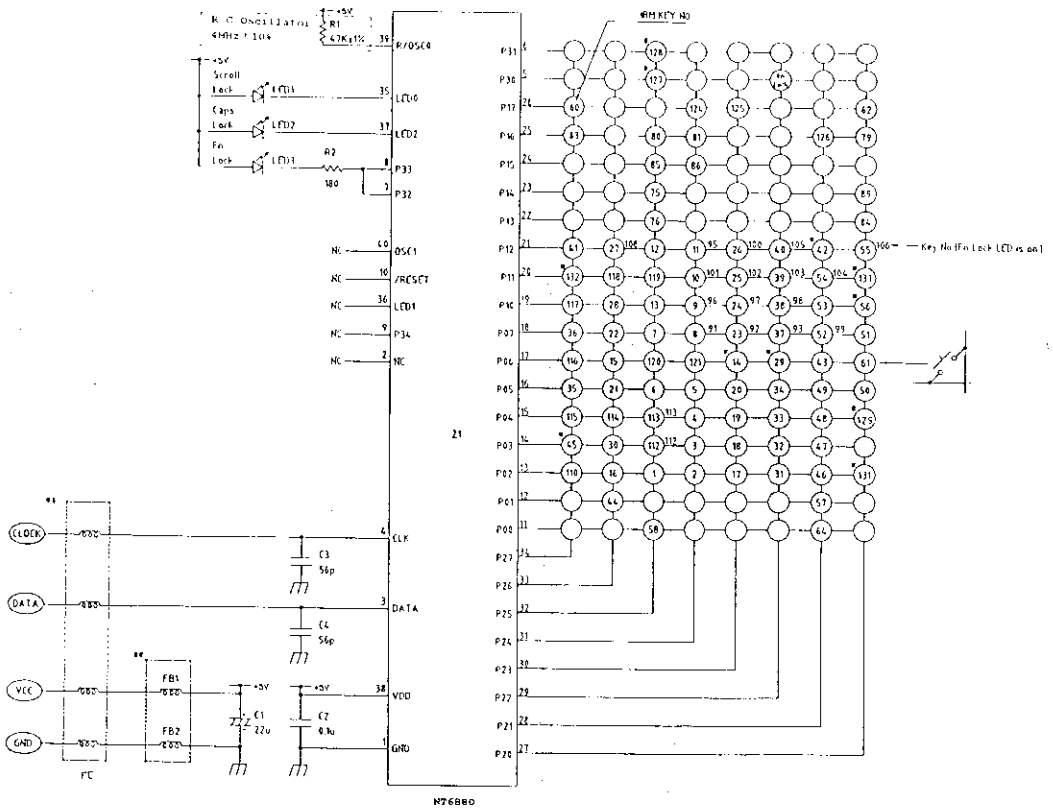

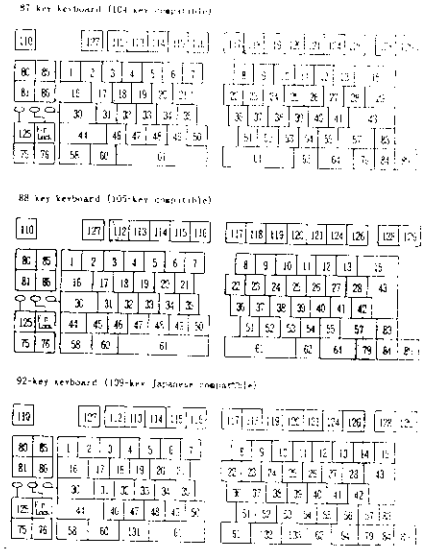

Issued : September 3, 1998