ATTACHMENT C. BLOCK DIAGRAM

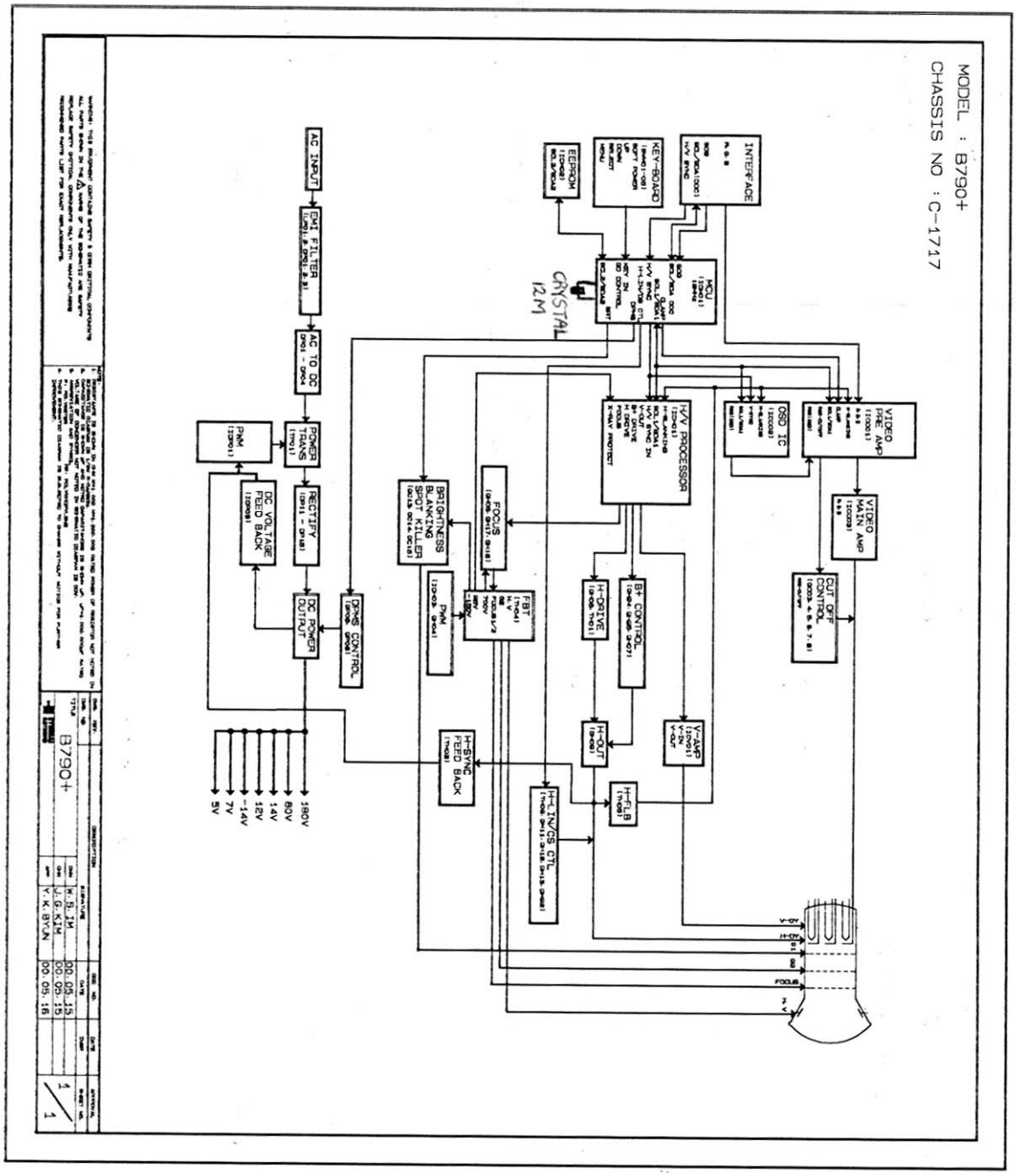
MODEL : B790+
CHASSIS NO : C-1717
INTERFACE
KEY-BOARD
EEPROM
MCU
CRYSTAL 12M
VIDEO PRE AMP
OSD IC
H/V PROCESSOR
VIDEO MAIN AMP
CUT OFF CONTROL
V-AMP
H-FLB
H-CLN/CS CTL
H-OUT
H-DRIVE
B+ CONTROL
FBT
FOCUS
BRIGHTNESS BLANKING SCREEN KILLER
PWM
DOHMS CONTROL
H-SYNC FEED BACK
AC INPUT
EMI FILTER
AC TO DC
POWER TRANS
RECTIFY
DC POWER OUTPUT
DC VOLTAGE FEED BACK
PWM
180V
80V
14V
12V
-14V
7V
5V
B790+
W.S.JIM
J.G.KIM
Y.K.BYUN
00.05.15
00.05.15
00.05.16
1/1