JMA-5352-9R
JMA-5362-8R

MARINE RADAR EQUIPMENT

INSTRUCTION MANUAL

JRC Japan Radio Co., Ltd.

◆◆◆PRECAUTIONS BEFORE OPERATION◆◆◆

■ Cautions for high voltage

High voltages from hundreds volts to tens of thousands volts are to be applied to the electronic equipment such radio and radar devices. You do not face any danger during normal operation, but sufficient cares are required for maintenance, inspection and adjustment of their internal components. (Maintenance, check-up and adjustment of the inside of the equipment are prohibited except by maintenance specialists.)

High voltages of tens of thousands volts are so dangerous as to bring an instantaneous death from electric shock, but even voltages of hundred volts may sometimes lead to a death from electric shock. To prevent such an accident, make it a rule to turn off the power switch, discharge capacitors with a wire surely earthed on an end make sure that internal parts are no longer charged before you touch any parts inside these devices. At the time, wearing dry cotton gloves ensures you further to prevent such danger. It is also a necessary caution to put one of your hands in the pocket and not to use your both hands at the same time.

It is also important to select a stable foothold always to prevent additional injuries once you were shocked by electricity. If you were injured from electric shock, disinfect the burn sufficiently and get it taken care of promptly.

■ What to do in case of electric shock

When finding a victim of electric shock, turn off the power source and earth the circuit immediately.

If it is impossible to turn off the circuit, move the victim away promptly using insulators such as dry wood plate and cloth without touching the victim directly.

In case of electric shock, breathing may stop suddenly if current flows to the respiration center in the brain. If the shock is not so strong, artificial respiration may recover breathing. When shocked by electricity, the victim will come to look very bad with weak pulse or without beating, resulting in unconsciousness and rigidity. In this case, it is necessary to perform an emergency measure immediately.

◆◆◆FIRST-AID TREATMENTS◆◆◆

☆ First-aid treatments

As far as the victim of electric shock is not in dangerous condition, do not move him and practice artificial respiration on him immediately. Once started, it should be continued rhythmically.

(1) Do not touch the victim confusedly as a result of the accident, but the rescuer may also get an electric shock.

(2) Turn off the power source calmly and move the victim away quietly from the electric line.

(3) Call a physician or ambulance immediately or ask someone to call a doctor.

(4) Lay the victim on this back and loosen his necktie, clothes, belt, etc.

(5) a. Examine the victim's pulse.
b. Examine his heartbeat bringing your ear close to his heart.
c. Examine his breathing bringing the back of your hand or your face close to his face.
d. Check the size of the pupils of his eyes.

(6) Open the victim's mouth and take out artificial teeth, cigarette or chewing gum if any. Keep his mouth open, stretch his tongue and insert a towel or the like in his mouth to prevent the tongue from suffocating. (If it is hard to open his mouth due to set teeth, open it with a screwdriver and insert a towel in this mouth.)

(7) Then, wipe his mouth so that foaming mucus does not accumulate inside.

☆ When pulse is beating but breathing has stopped

(Mouth-to-mouth respiration) Fig. 1

(1) Tilt the victim's head back as far as this face looks back. (A pillow may be inserted his neck.)
(2) Push his jaw upward to open his throat wide (to spread his airway).
(3) Pinch the victim's nostrils and take a deep breath, block his mouth completely with yours and blow into his mouth strongly. Take a deep breath again and blow into his mouth. Continue this 10 to 15 times a minutes (blocking his nostrils).
(4) Carefully watch that he has recovered his natural breathing and atop practicing artificial respiration.
(5) If it is difficult to open the victim's mouth, insert a rubber or vinyl tube into one of his nostrils and blow into it blocking the other nostril and his mouth completely.
(6) When the victim recovers consciousness, he may try to stand up suddenly, but let him lie calmly and serve him with a cup of hot coffee or tea and keep him warm and quiet. (Never give him alcoholic drinks.)

Method of mouth-to-mouth respiration by raising head

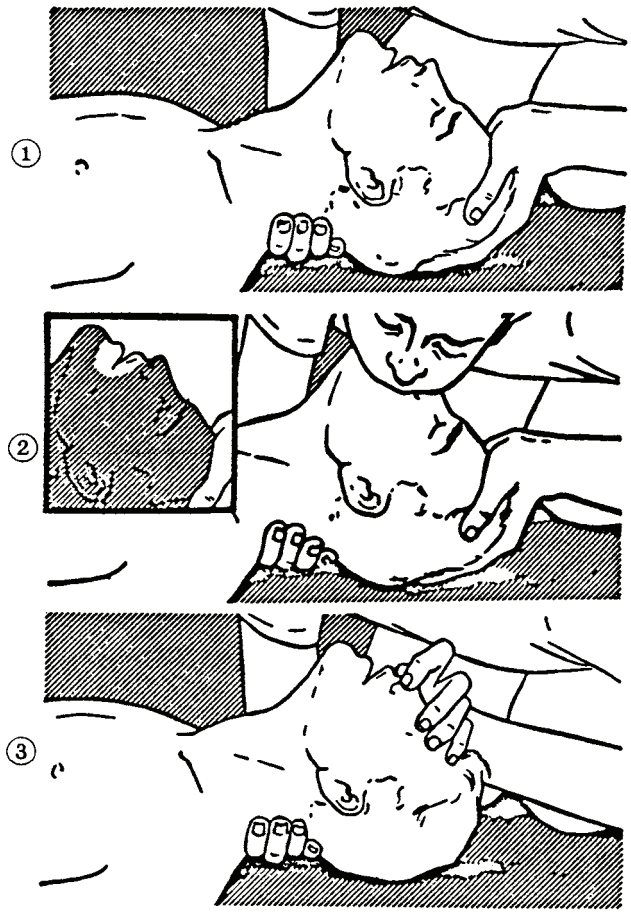

(1) Raise the victim's head. Support his forehead with one of your hand and his neck with the other hand. →①

When you tilt his head backward, the victim, in most cases, opens his mouth to the air. This makes mouth-to mouth respiration easy.

(2) Cover his mouth as widely as possible with yours and press your cheek against his nose →②

or, pinch his nostrils with your fingers to prevent air from leaking. →③

(3) Blow into his lungs. Continue blowing into his mouth until his breast swells. Blow into his mouth as quickly as possible for the first 10 times.

Fig. 1 Mouth-to mouth respiration

☆ When both pulse and breathing have stopped

Perform the (Cardiac massage) Fig. 2 and (Mouth-to-mouth respiration) Fig. 1

When no pulse has come not to be felt, his pupils are open and no heartbeat is heard, cardiac arrest is supposed to have occurred and artificial respiration must be performed.

(1) Place your both hands, one hand on the other, on the lower one third area of his breastbone and compress his breast with your elbows applying your weight on his breast so that it is dented about 2cm (Repeat compressing his breast 50 times or so a minutes). (Cardiac massage)

(2) In case of one rescuer,
Repeat cardiac massages about 15 times and blow into his mouth 2 times quickly, and repeat this combination.
In case of two rescuers,
One person repeats cardiac massages 15 times while the other person blow into his mouth twice, and they shall repeat this combination. (Perform the cardiac massage and mouth-to-mouth respiration)

(3) Examine his pupils and his pulse sometimes. When the both have returned to normal, stop the artificial respiration, serve him with a cup of hot coffee or tea and keep him warm and calm while watching him carefully. Commit the victim to a medical specialist depending on his condition. (Never give him alcoholic drinks.) To let him recover from the mental shock, it is necessary for persons concerned to understand his situations and the necessary treatment.

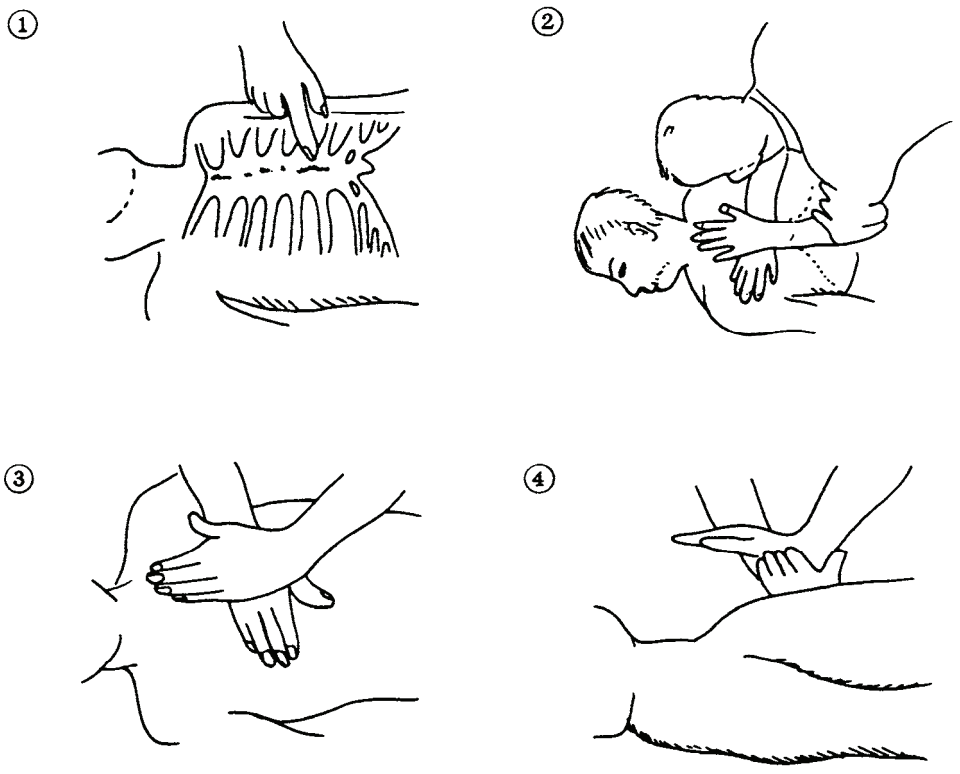

Fig. 2 Cardiac massage

PREFACE

Thank you very much for purchasing the JRC marine radar equipment, JMA-5300MK2 series.
This equipment is a marine radar equipment designed to obtain safe operation of marine ships.
This equipment consists of a radar signal transmitter-receiver unit, a LCD display unit and a scanner unit as its main units.

- Before operating the equipment, be sure to read this instruction manual carefully for correct operation.
- Maintain this instruction manual so that operators can refer to it at anytime.

Refer to this manual when any inconvenience or defect occurs.

●Before Operation●

Pictorial Indication

Various pictorial indications are included in this manual and are shown on these equipment so that you can operate them safety and correctly and prevent any danger to you and/or to other persons and any damage to your property during operation. Such indications and their meanings are as follows.
Please understand them before you read this manual:

DANGER	This indication is shown where incorrect equipment operation due to negligence may cause death or serious injuries.
WARNING	This indication is shown where any person is supposed to be in danger of being killed or seriously injured if this indication is neglected and these equipment are not operated correctly.
CAUTION	This indication is shown where any person is supposed to be injured or any property damage is supposed to occur if this indication is neglected and these equipment are not operated correctly.

Examples of Pictorial Indication

Electric Shock

The △ mark represents CAUTION (including DANGER and WARNING).
Detailed contents of CAUTION (“Electric Shock” in the example on the left.) is shown in the mark.

Disassembling Prohibited

Prohibited

The ⃠ mark represents prohibition.
Detailed contents of the prohibited action (“Disassembling Prohibited” in the example on the left.) is shown in the mark.

Disconnect the power plug

Instruction

The ● mark represents instruction.
Detailed contents of the instruction (“Disconnect the power plug “ in the example on the left.) is shown in the mark.

Warning Label

There is a warning label on the top cover of the equipment.
Do not try to remove, break or modify the label.

●PRECAUTIONS●

DANGER

Never carry out internal inspection or repair work of the equipment by users.

Inspection or repair work by uncertified personnel may result in fire hazard or electrocution.

For inspection and repair work of equipment components, consult with our branch office, branch shop, sales office, or our distributor in your district.

When conducting maintenance, make sure to turn the main power off.

Failure to comply may result in electrocution.

Turn off the main power before cleaning the equipment. Especially when a rectifier is used, make sure to turn it off since voltage is still outputted from the rectifier even after the indicator and the radar are turned off. Failure to comply may result in equipment failure, or death or serious injury due to electric shock.

When conducting maintenance work on the scanner, make sure to turn its main power off.

Failure to comply may result in electrocution or injuries.

Make sure to turn off the scanner safety switch. Failure to comply may result in injuries caused by physical contact with the rotating scanner.

Do not touch the radiator. Even if the power is turned off, the radiator may be rotated by the wind.

WARNING

Never directly touch the internal components of the scanner or indicator. Direct contact with these high-voltage components may cause electrocution. For maintenance, inspection, or adjustment of equipment components, consult with our branch office, branch shop, sales office, or our distributor in your district.

<u>To contact our sales department, branch offices, branch shops, and sales offices:</u>

Please refer to the "Office List" at the end of the document.

Do not get close to the radiant section of the scanner. It is a rotating part, and it may cause injuries if it suddenly starts rotating and consequently hits the body. It is recommended that the radiant section be installed at a high place such as on the roof of the wheelhouse, on the flying bridge, on the trestle, or on the radar mast so that no one can get close to it. When any work must be done on the scanner, make sure to turn the safety switch off.

<u>Microwave radiation level:</u>

Keep away from a scanner.

The high level of microwave is radiated from the center of the front face of the scanner specified below. The microwave exposure at close range could result in injuries (especially of the eyes).

Make sure to install the scanner at a place higher than human height.

Direct exposure to electromagnetic waves at close range will have adverse effects on the human body.

Do not change MBS Level/Area unless absolutely necessary.

Incorrect adjustment will result in deletion of nearby target images and thus collisions may occur resulting in death or serious injuries.

WARNING

When cleaning the display screen, do not wipe it too strongly with a dry cloth. Also, do not use gasoline or thinner to clean the screen. Failure to comply will result in damage to the screen surface.

Direct exposure to electromagnetic waves at close range will have adverse effects on the human body. When it is necessary to get close to the scanner for maintenance or inspection purposes, make sure to turn the indicator power switch to "OFF" or "STBY."

Direct exposure to electromagnetic waves at close range will have adverse effects on the human body.

When conducting maintenance work, make sure to turn off the power and unplug the power connector J1 of the radar process unit so that the power supply to the equipment is completely cut off.

Some equipment components can carry electrical current even after the power switch is turned off, and conducting maintenance work without unplugging the power connector may result in electrocution, equipment failure, or accidents.

When disposing of used lithium batteries, be sure to insulate the batteries by attaching a piece of adhesive tape on the + and - terminals. Failure to comply may cause heat generation, explosion, or fire when the batteries get shorted out.

CAUTION

A malfunction may occur if the power in the ship is instantaneously interrupted during operation of the radar. In this case, the power should be turned on again.

Normally, use the automatic tune mode.

Use the manual tune mode only when best tuning is not possible in the automatic tune mode due to deterioration of magnetron.

If the gain is too high, unnecessary signals including receiver noise and false video increase resulting in reduction of visibility of targets.

On the contrary, if the gain is too low, targets including ships and dangerous objects may not be clearly indicated.

When using the sea clutter suppression function, never set the suppression level too high canceling out all image noises from the sea surface at close range.

Detection of not only echoes from waves but also targets such as other ships or dangerous objects will become inhibited.

When using the sea clutter suppression function, make sure to choose the most appropriate image noise suppression level.

When using the rain / snow clutter suppression function, never set the suppression level too high canceling out all image noises from the rain or snow at the close range.

Detection of not only echoes from the rain or snow but also targets such as other ships or dangerous objects will become inhibited.

When using the rain / snow clutter suppression function, make sure to choose the most appropriate image noise suppression level.

CAUTION

Use the radar only as a navigation aid.

The final navigation decision must always be made by the operator him/herself.

Making the final navigation decision based only on the radar display may cause accidents such as collisions or running aground.

Use target tracking function only as a navigation aid. The final navigation decision must always be made by the operator him/herself.

Making the final navigation decision based only on tracking target information may cause accidents.

Tracking target information such as vector, target numerical data, and alarms may contain some errors. Also, targets that are not detected by the radar cannot be acquired or tracked.

Making the final navigation decision based only on the radar display may cause accidents such as collisions or running aground.

In setting an automatic acquisition zone, it is necessary to adjust the gain, sea clutter suppression and rain clutter suppression to ensure that target echoes are displayed in the optimum conditions. No automatic acquisition zone alarms will be issued for targets undetected by the radar, and this may cause accidents such as collisions.

Target Tracking Function Test is provided to test if the target tracking function is operating normally. Thus, do not use the function except when you test the target tracking function.

In particular, if the operation test mode is used during navigation, pseudo targets appear on the radar display and they are confused with actual targets.

Do not use the mode during navigation.

Otherwise, an accident may result.

CAUTION

If a great value is set as a condition for deciding targets as identical, a tracking target near an AIS target is regarded as identical to the AIS target and it may not be displayed any more.

For example, when a pilot boat (which is a small target not being tracked) equipped with an AIS function approaches a cargo ship as a tracking target not equipped with an AIS function, the tracking target symbol of the cargo ship may not be displayed any more.

Since these alarms may include some errors depending on the target tracking conditions, the navigation officer himself should make the final decision for ship operations such as collision avoidance.

Making the final navigation decision based only on the alarm may cause accidents such as collisions.

Any adjustments must be made by specialized service personnel.

Incorrect settings may result in unstable operation.

Do not make any adjustments during navigation. Failure to comply may result in adverse effects on the radar function which may lead to accidents or equipment failure.

Optimal values have been set for Video Level and Vector Constant; therefore, never change their values unless absolutely necessary. Failure to comply may result in accidents that would lower target tracking performance.

Do not change the quantization level settings unless absolutely necessary. If set at an inappropriate value, the target acquisition or target tracking function deteriorates, and this may lead to accidents.

Any adjustments must be made by specialized service personnel.

Failure to comply may result in accidents or equipment failure.

CAUTION

	Make sure to shut off the main power before replacing parts. Failure to comply may result in electrocution or equipment failure.
	When replacing magnetrons, make sure to shut off the main power and let the equipment stand for more than 5 minutes to discharge the high-voltage circuit. Failure to comply may result in electrocution.
	Make sure to take off your watch when your hand must get close to the magnetron. **Failure to comply may result in damage to the watch since the magnetron is a strong magnet.**
	Make sure that two or more staff member work together when replacing the LCD. If only one person attempts to replace the LCD, he/she may drop it and become injured.
	Do not directly touch the inverter circuit of the LCD display with a bare hand since high voltage temporarily remains in the circuit even after the main power is shut off. **Failure to comply may result in electrocution.**

The Mounting Point of the Warning Label

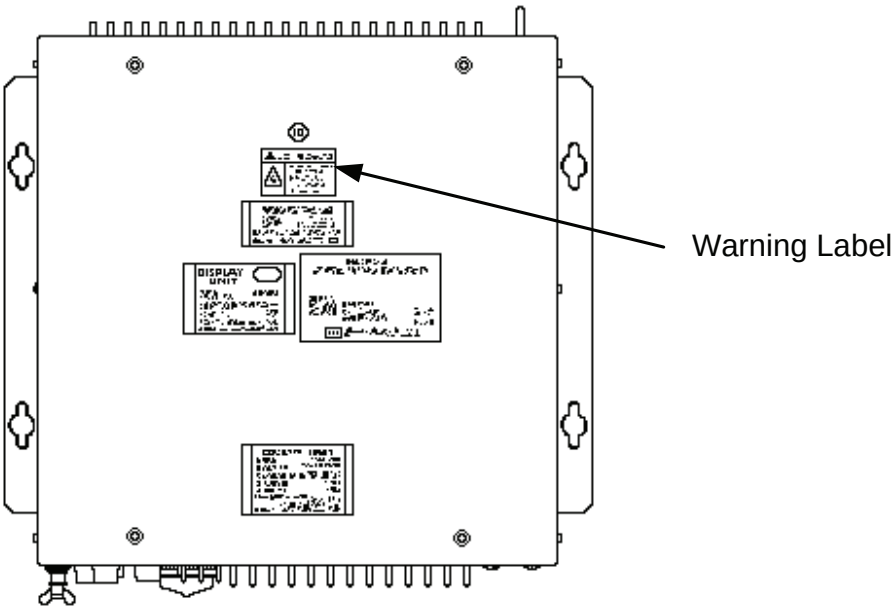

NDC-1417 Radar Process Unit

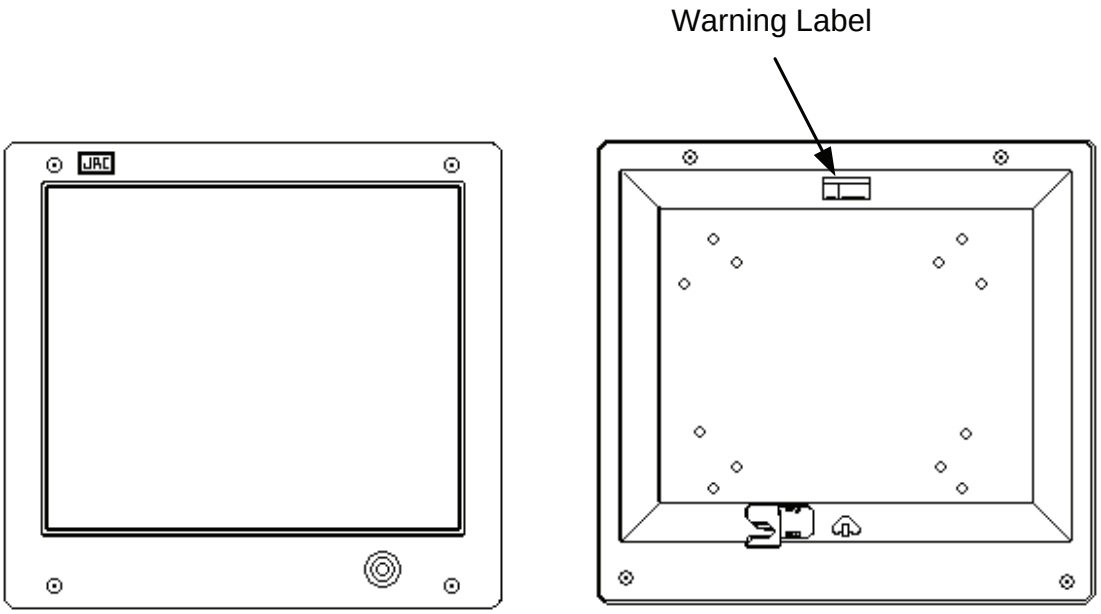

Front face

Back face

NWZ-173 LCD Monitor

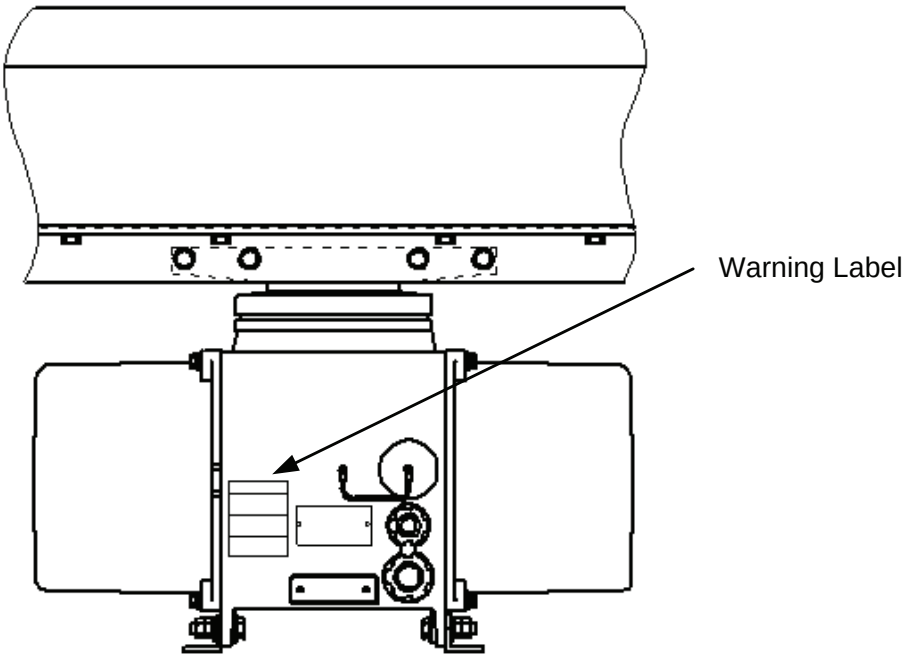

NKE-1064 / NKE-3710-8 Scanner Unit

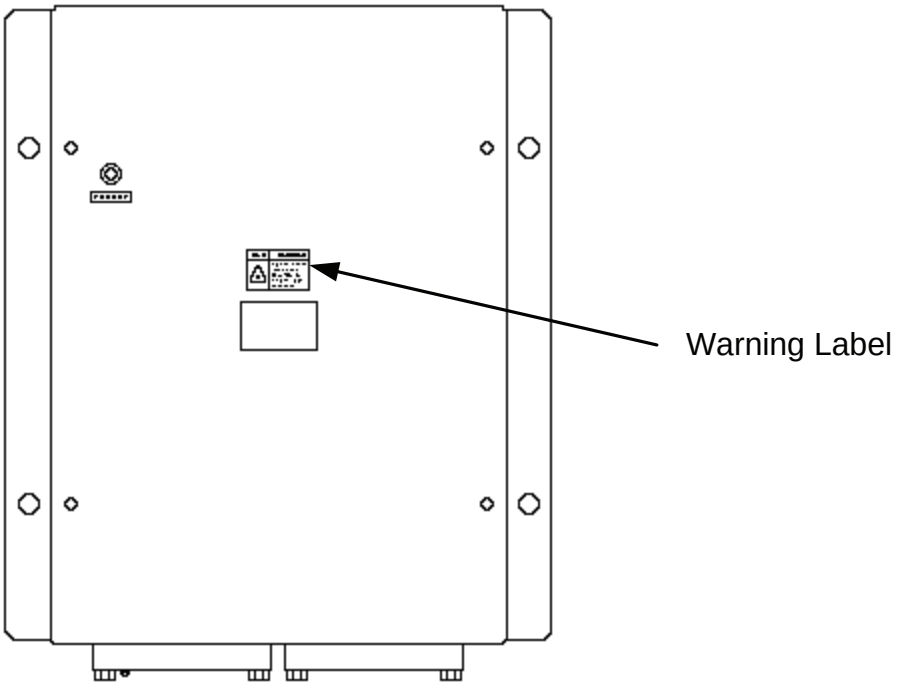

NQE-3141-4A/8A Interswitch Unit

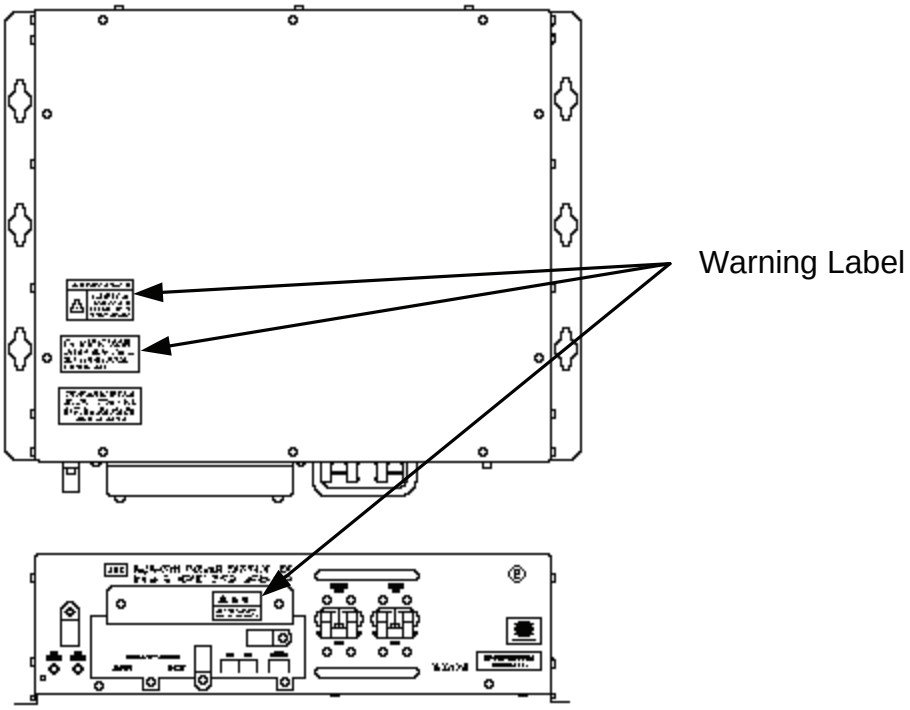

NBA-5111 Power Supply

EQUIPMENT APPEARANCE

Scanner Unit Type NKE-1064 (9 feet)

Scanner Unit Type NKE-3710-8 (8 feet)

NDC-1417 Processor Unit (Desktop Type)

NWZ-173 LCD Monitor Unit (Desktop Type)
NCE-5172 Operation Unit (Desktop Type)

NCD-4530 Display Unit (Desktop Type)

GLOSSARY

This section describes the main terms used for this equipment and general related maritime terms.

A

AZ — Acquisition/Activation zone
A zone set up by the operator in which the system should automatically acquire radar targets and activate reported AIS targets when entering the zone.

Activated target — A target representing the automatic or manual activation of a sleeping target for the display of additional information.

AIS — Automatic Identification System
A system which enables ships and shore stations to obtain identifying and navigation information about other ships at sea, using an automated transponder.

Anti-clutter rain — Rain/snow clutter suppression.

Anti-clutter sea — Sea clutter suppression.

Associated target — A target simultaneously representing a tracked target and a reported AIS target having similar parameters (position, course, speed) which comply with an association algorithm.

AZI — AZImuth stabilization mode

B

BCR/BCT — Bow Crossing Range and Bow Crossing Time

C

C up — Course up
Own ship's course is pointed to the top center of the radar display.

CCRP — The Consistent Common Reference Point
A location on own ship, to which all horizontal measurements such as target range, bearing, relative course, relative speed, CPA or TCPA are referenced, typically the conning position of the bridge.

Clutter — Unwanted reflections on a radar screen, from sea surface, rain or snow.

COG	Course Over Ground The direction of the ship's movement relative to the earth, measured on board the ship, expressed in angular units from true north
CORREL	CORRELation
CPA/TCPA	The distance to the Closest Point of Approach and Time to the Closest Point of Approach. Limits are set by the operator and are related to own ship.
CTW	Course Through Water The direction of the ship's movement through the water

D

DRIFT	The current velocity for manual correction or the current speed on the horizontal axis of the 2-axis log is displayed.

E

EBL	Electronic Bearing Line An electronic bearing line originated from own ship’s position.
ETA	Estimated Time of Arrival

G

Ground stabilization	A display mode in which speed and course information are referred to the ground, using ground track input data.

H

HDG	Heading The horizontal direction that the bow of a ship is pointing at any instant, expressed in angular units from a reference direction .
HL	Heading line A graphic line on a radar presentation drawn from the consistent common reference point to the bearing scale to indicate the heading of the ship
HSC	Vessels which comply with the definition in SOLAS for high speed craft
H up	Head up Own ship’s heading line is always pointed to the top center of the radar display.

I

IMO	International Maritime Organisation
Interswitch Unit	A device to switch over two or more radar display units and two or more scanners.

IR radar Interference Rejecter

ISW InterSWitch

L

Lost AIS target A target symbol representing the last valid position of an AIS target before the reception of its data was lost, or its last dead-reckoned position.

Lost tracked target One for which target information is no longer available due to poor, lost or obscured signals.

LP Long Pulse

M

MMSI Maritime Mobile Service Identity

MOB Man OverBoard

MON Performance monitor

MP Medium Pulse

N

nm 1nm=1852m

N up North up
The north is always pointed to the top center of the radar display.

O

Own track Display function of own ship's track

P

PI Parallel Index line

Past positions Equally time-spaced past position marks of a tracked or AIS target and own ship.

POSN POSitioN (CURR POSN : CURRent POSitioN)

PRF Pulse Repetition Frequency
The number of radar pulses transmitted each second.

PROC PROCess
Radar signal processing function

R

Radar beacon A navigation aid which responds to the radar transmission by generating a radar signal to identify its position and identity

Radar cross-section	Radar cross-section of a target determines the power density returned to the radar for a particular power density incident on the target
Range Rings	A set of concentric circles labeled by distance from CCRP.
Reference target	A symbol indicating that the associated tracked stationary target is used as a speed reference for the ground stabilization
Relative course	The direction of motion of a target relative to own ship motion
Relative speed	The speed of a target relative to own ship's speed data
Relative vector	A predicted movement of a target relative to own ship's motion
RM	Relative Motion A display on which the position of own ship remains fixed, and all targets move relative to own ship.
RM(R)	Relative Motion. Relative Trails.
RM(T)	Relative Motion. True Trails.
ROT	Rate Of Turn Change of heading per time unit.
Route	A set of waypoints.
RR	Range Rings

S

SART	Search And Rescue Transponder Radar transponder capable of operating in the 9GHz band
Sea stabilization	A display mode in which speed and course information are referred to the sea.
Sea state	Status of the sea condition due to the weather environment, expressed as a sea state 0 for flat conditions with minimal wind, to sea state 8 for very rough sea conditions.
SET	The current direction for manual correction or the current speed on the horizontal axis of the 2-axis log is displayed.
Sleeping AIS target	A target indicating the presence and orientation of a vessel equipped with AIS in a certain location.

SOG	Speed Over the Ground The speed of the ship relative to the earth, measured on board of the ship.
SP	Short Pulse
STAB	STABilization
STW	Speed Through Water The speed of the ship relative to the water surface.

T

TCPA	Time to Closest Point of Approach to own ship
Test target	Radar target of known characteristics used for test requirement
TM	True Motion A display across which own ship moves with its own true motion.
Trails	Tracks displayed by the radar echoes of targets in the form of an afterglow.
Trial maneuver	A graphical simulation facility used to assist the operator to perform a proposed maneuver for navigation and collision avoidance purposes.
True course	The direction of motion relative to ground or to sea, of a target expressed as an angular displacement from north
True speed	The speed of a target relative to ground, or to sea
True vector	A vector representing the predicted true motion of a target, showing course and speed with reference to the ground or sea
TT	Target Tracking. A computer process of observing the sequential changes in the position of a radar target in order to establish its motion. Such a target is a Tracked Target.
TTG	Time To Go. Time to next waypoint.
TXRX	Transceiver Unit

U

UTC	Universal Time Coordinated. The international standard of time, kept by atomic clocks around the world.

V

VRM Variable Range Marker
An adjustable range ring used to measure the distance to a target.

W

Waypoint A geographical location on a route indicating a event.

CONTENTS

PREFACE i

BEFORE OPERATION ii

PRECAUTIONS iii

The Mounting Point of the Warning Label ix

EQUIPMENT APPEARANCE xiv

GLOSSARY xvi

1. GENERAL AND EQUIPMENT COMPOSITION

1.1 FUNCTIONS 1-1
1.1.1 FUNCTION OF THIS SYSTEM 1-1
1.2 FEATURES 1-2
1.3 CONFIGURATION 1-4
1.4 OUTSIDE DRAWINGS 1-5
1.5 GENERAL SYSTEM DIAGRAMS 1-15

2. NAMES AND FUNCTIONS OF CONTROL PANEL KEYS AND FUNCTIONS OF SOFTWARE BUTTONS

2.1 NAMES OF DISPLAY 2-1
2.2 NAMES AND FUNCTIONS OF CONTROL PANEL KEYS 2-10
2.3 FUNCTIONS OF SOFTWARE BUTTONS 2-15

3. BASIC OPERATION

3.1 OPERATION FLOW 3-1
3.1.1 POWER ON AND START THE SYSTEM 3-2
3.1.2 OBSERVE AND ADJUST VIDEO 3-3
3.1.3 ACQUIRE AND MEASURE DATA 3-3
3.1.4 DISPLAY AND MEASURE WITH REFERENCE TO CCRP 3-3
3.1.5 END THE OPERATION AND STOP THE SYSTEM 3-4

3.2 OBSERVE AND ADJUST VIDEO 3-5
3.2.1 ADJUST MONITOR BRILLIANCE [BRILL] 3-5
3.2.2 CHANGE OBSERVATION RANGE [RANGE + / -] 3-5
3.2.3 TUNE 3-6
3.2.4 ADJUST GAIN [GAIN / PL] 3-7
3.2.5 SUPPRESS SEA CLUTTER [AUTO-SEA] 3-8
3.2.6 SUPPRESS RAIN / SNOW CLUTTER [AUTO-RAIN] 3-10
3.2.7 RESET ALARM BUZZER [ALARM ACK] 3-11
3.3 OPERATION PROCEDURES 3-12
3.3.1 MOVE CROSS CURSOR MARK BY TRACKBALL 3-12
3.3.2 OPERATE SOFTWARE BUTTONS 3-13
3.3.3 BASIC MENU OPERATION 3-14
3.3.4 OPERATION ON NUMERIC VALUE, LATITUDE / LONGITUDE AND CHARACTER INPUT MENU 3-16
3.3.5 OVERVIEW OF MENU STRUCTURE 3-20
3.3.6 OPERATE MULTI-DIAL [MULTI] 3-20
3.4 GENERAL RADAR OPERATION 3-22
3.4.1 INTERFERENCE REJECTION (IR) 3-22
3.4.2 SWITCH TRANSMITTER PULSE LENGTH [GAIN / PL] 3-23
3.4.3 TARGET ENHANCE (ENH) 3-24
3.4.4 USE VIDEO PROCESSING (PROC) 3-25
3.4.5 SWITCH AZIMUTH DISPLAY MODE [AZI MODE] 3-26
3.4.6 SWITCH TRUE / RELATIVE MOTION DISPLAY MODE [TM / RM] 3-27
3.4.7 MOVE OWN SHIP'S DISPLAY POSITION [OFF CENT] 3-28
3.4.8 DISPLAY RADAR TRAILS [TRAILS] 3-29
3.4.9 ERASE PART OF RADAR TRAILS (TRAILS ERASE) 3-31
3.4.10 OPERATE RADAR TRAILS FILE (FILE OPERATIONS) 3-32
3.4.11 ZOOM (X2) 3-34
3.4.12 HIDE / DISPLAY RANGE RINGS (RR / HL) 3-34
3.4.13 HIDE GRAPHICS INFORMATION ON RADAR DISPLAY (DATA OFF) 3-35
3.4.14 SWITCH DAY / NIGHT MODE [DAY / NIGHT] 3-35
3.4.15 ADJUST OPERATION PANEL BRILLIANCE [PANEL] 3-35
3.4.16 SET TRUE BEARING (GYRO SETTING) 3-36
3.4.17 SET OWN SHIP SPEED 3-36
3.4.18 MAGNET COMPASS CORRECTION (MAG COMPASS SETTING) 3-37
3.4.19 SET DRIFT CORRECTION (SET / DRIFT SETTING) 3-38
3.4.20 GPS RECEIVER SETTING (GPS PROCESS SETTING) 3-39
3.4.21 DGPS RECEIVER SETTING (DGPS SETTING) 3-43

3.4.22 SBAS RECEIVER SETTING (SBAS SETTING) 3-44
3.4.23 DISPLAYING GPS RECEPTION STATUS (GPS STATUS)..... 3-47
3.4.24 SET RADAR ALARM (RADAR ALARM) 3-48
3.5 USE OWN SHIP'S TRACK DATA..... 3-50
3.5.1 DISPLAY OWN SHIP’S TRACK (DISPLAY OWN TRACK)..... 3-50
3.5.2 SAVE OWN SHIP'S TRACK DATA (OWN TRACK MEMORY) 3-51
3.5.3 CANCEL SAVING OF OWN SHIP’S TRACK DATA (OWN TRACK MEMORY) 3-51
3.5.4 CLEAR OWN SHIP’S TRACK DATA (CLEAR OWN TRACK) 3-51
3.5.5 OPERATE OWN SHIP'S TRACK FILES (FILE OPERATIONS)..... 3-52
3.6 DISPLAY USER MAP..... 3-55
3.6.1 CREATE USER MAP (MARK / LINE)..... 3-55
3.6.2 SET USER MAP DISPLAY (MARK DISPLAY SETTING)..... 3-58
3.6.3 EDIT USER MAP (EDIT USER MAP)..... 3-61
3.6.4 EDIT MARK / LINE LIST (MARK / LINE LIST) 3-67
3.6.5 CORRECT POSITION ON USER MAP (SHIFT USER MAP) 3-73
3.6.6 OPERATE USER MAP FILE (FILE OPERATIONS) 3-74
3.6.7 SET AND DISPLAY GEODETIC SYSTEM (GEODETIC) 3-78
3.7 USE ROUTE FUNCTION 3-79
3.7.1 DISPLAY DESTINATION MARK (NMEA WAYPOINT DISPLAY)..... 3-79
3.8 APPLIED OPERATIONS..... 3-80
3.8.1 SET RADAR SIGNAL PROCESSING (PROCESS SETTING)..... 3-80
3.8.2 SET RADAR TRAILS (RADAR TRAILS SETTING)..... 3-82
3.8.3 SET SCANNER UNIT (TXRX SETTING) 3-84
3.8.4 SET CURSOR (CURSOR SETTING)..... 3-85
3.8.5 SET RADAR DISPLAY (DISPLAY SETTING) 3-86
3.8.6 ADJUST SOUND VOLUME (BUZZER VOLUME) 3-88
3.8.7 SET USER KEYS [USER KEY 1 / 2] 3-89
3.8.8 SET NAVIGATION DATA DISPLAY (MULTI WINDOW SETTING)..... 3-91
3.9 USE FUNCTION KEY [FUNC] 3-95
3.9.1 OPERATION PROCEDURES [FUNC] 3-95
3.9.2 FUNCTION SETTING MENU ITEMS (USER FUNCTION SETTING). 3-96
3.9.3 OVERVIEW OF FUNCTION OPERATIONS (USER FUNCTION SETTING)..... 3-97
3.9.4 OVERVIEW OF SAVED FUNCTION SETTING DATA..... 3-100
3.10 USE USER SETTING..... 3-101
3.10.1 SAVE OPERATING STATE (SAVE USER SETTING) 3-101
3.10.2 LOAD OPERATING STATE (LOAD USER SETTING)..... 3-102
3.10.3 DELETE OPERATING STATE (DELETE USER SETTING)..... 3-102

3.11 USING CARD 3-103
3.11.1 OPERATE FILE ON THE CARD (FILE MANAGER) 3-103
3.12 DISPLAY SIMPLE CHART 3-109
3.12.1 DISPLAY JRC COASTLINE ROM CARD [MAP] 3-109
3.12.2 DISPLAY ERC CARD [MAP] 3-109
3.12.3 DISPLAY JRC CHART ON CF CARD (SEL JRC ROM CARD FILE) 3-110
3.12.4 FILL CHARTS (FILL LAND AREA) 3-111
3.12.5 SET JRC / ERC CHART DISPLAY (JRC / ERC SETTING) 3-112
3.12.6 DISPLAY C-MAP CARD [MAP] 3-116
3.12.7 CORRECTING CHART POSITION (MAP DISPLAY SETTING) 3-119
3.12.8 CHART PLOTTING BEARING MODE (MAP DRAW AZI MODE) 3-121
3.13 CAPTURE SCREEN TO CARD 3-122
3.13.1 SAVE SCREEN TO CARD 3-122
3.13.2 AUTOMATICALLY SAVE SCREEN TO CARD 3-122
3.13.3 ERASING SAVE SCREEN DATA 3-123
3.13.4 SET SAVE ITEMS 3-124
3.13.5 SET FILE STYLE 3-124
3.13.5 OPEN THE CAPTURED SCREEN FILE 3-125

4. MEASUREMENT OF RANGE AND BEARING

4.1 USE OF NAVIGATION TOOLS 4-1
4.1.1 USING CURSOR (CURSOR) 4-2
4.1.2 USING RANGE RINGS [RR / HL] 4-2
4.1.3 USING ELECTRONIC BEARING LINE (EBL1/EBL2) 4-3
4.1.4 USING VARIABLE RANGE MARKER (VRM1 / VRM2) 4-6
4.1.5 USING PARALLEL INDEX LINES (PI MENU) 4-7
4.1.6 OPERATING EBL MANEUVER FUNCTION (EBL MANEUVER SETTING) 4-12
4.1.7 USING MOB [MOB] 4-14
4.1.8 OPERATING EBL, VRM, AND PI WITH CURSOR 4-14
4.2 MEASUREMENT OF RANGE AND BEARING 4-17
4.2.1 MEASUREMENT WITH CURSOR POSITION (CURSOR) 4-18
4.2.2 MEASUREMENT WITH ELECTRONIC BEARING LINE AND VARIABLE RANGE MARKER [EBL] [VRM] 4-19
4.2.3 MEASUREMENT WITH TWO ARBITRARY POINTS 4-20

5. OPERATION OF TARGET TRACKING AND AIS

USAGE OF TARGET TRACKING FUNCTION 5-1
5.1 PREPARATION 5-2
5.1.1 COLLISION AVOIDANCE 5-3
5.1.2 DEFINITIONS OF SYMBOLS 5-6
5.1.3 RADAR DISPLAY 5-9
5.1.4 CURSOR MODES (CURSOR) 5-11
5.1.5 SETTING COLLISION DECISION CRITERIA 5-13
5.1.6 SETTING CPA RING 5-13
5.1.7 SETTING VECTORS (VECTOR TIME) 5-14
5.1.8 SETTING THE GPS ANTENNA LOCATION 5-15
5.2 TARGET TRACKING OPERATION 5-16
5.2.1 ACQUIRING TARGET [ACQ] 5-17
5.2.2 CANCELING UNWANTED TRACKED TARGETS [TGT CNCL] 5-20
5.2.3 TRACKED TARGET DATA DISPLAY [TGT DATA] 5-21
5.2.4 DISPLAYING TARGET ID NO. (TARGET NUMBER DISPLAY) 5-22
5.2.5 ADDING TRACKED TARGET ID NAME (NAME) 5-23
5.2.6 REFERENCE TARGET (REFERENCE) 5-24
5.2.7 OPERATION TEST (TT TEST MENU) 5-26
5.3 AIS OPERATION 5-31
5.3.1 RESTRICTIONS 5-31
5.3.2 SETTING AIS DISPLAY FUNCTION (AIS FUNCTION) 5-31
5.3.3 ACTIVATE AIS TARGETS (ACTIVATE AIS) 5-32
5.3.4 DEACTIVATE AIS TARGETS (DEACTIVATE AIS) 5-32
5.3.5 DISPLAYING AIS INFORMATION [TGT DATA] 5-33
5.3.6 DISPLAYING TARGET ID NO. (TARGET NUMBER DISPLAY) 5-37
5.3.7 SETTING AIS FILTER (AIS FILTER SETTING) 5-37
5.3.8 CONDITIONS FOR DECIDING AIS TARGET TO BE LOST 5-40
5.3.9 SETTING CONDITIONS FOR AIS ALARM (AIS ALARM SETTING) 5-41
5.4 DECISION OF TARGETS AS IDENTICAL (ASSOCIATION) 5-42
5.5 ALARM DISPLAY 5-44
5.6 TRACK FUNCTION 5-48
5.6.1 PAST POSITION (PAST POSN) 5-48
5.6.2 TARGET SHIP'S TRACKS (TARGET TRACK) 5-49
5.7 TRIAL MANEUVERING (TRIAL MANEUVER) 5-58
5.8 EPA OPERATION 5-62
5.8.1 DEFINITIONS OF SYMBOLS 5-63
5.8.2 PLOTTING TARGETS 5-64

5.8.3 MODIFYING PLOTTED TARGET DATA 5-64
5.8.4 CANCELING PLOTTED TARGET DATA 5-65
5.8.5 DISPLAYING NUMERIC DATA OF PLOTTED TARGETS 5-65

6. TRUE AND FALSE ECHOES ON DISPLAY

6.1 RADAR WAVE WITH THE HORIZON 6-1
6.2 STRENGTH OF REFLECTION FROM THE TARGET 6-3
6.3 SEA CLUTTER AND RAIN AND SNOW CLUTTER 6-5
6.4 FALSE ECHOES 6-9
6.5 DISPLAY OF RADAR TRANSPONDER (SART) 6-12

7. SETTINGS FOR SYSTEM OPERATION

7.1 SETTINGS AT INSTALLATION 7-1
7.1.1 HOW TO OPEN THE SERVICEMAN MENU 7-1
7.1.2 GYRO I/F SETTING 7-2
7.1.3 TUNING 7-4
7.1.4 BEARING ADJUSTMENT 7-5
7.1.5 RANGE ADJUSTMENT 7-5
7.1.6 NAVIGATOR SETTING (DEVICE) 7-6
7.1.7 SETTING OF TRUE BEARING VALUE 7-6
7.1.8 ANTENNA HEIGHT SETTING (ANTENNA HEIGHT) 7-7
7.1.9 SETTING OF CCRP/ANTENNA/GPS ANTENNA POSITION (CCRP SETTING) 7-8
7.2 SETTINGS 7-10
7.2.1 COMMUNICATION PORT SETTING (COM PORT SETTING) 7-10
7.2.2 SECTOR BLANK SETTING (SECTOR BLANK) 7-14
7.2.3 TNI BLANK SETTING (TNI BLANK) 7-15
7.2.4 SETTING OF BEARING PULSES FROM ANTENNA (OUTPUT PULSE) 7-16
7.2.5 SLAVE MODE SETTING (MASTER/SLAVE) 7-17
7.2.6 LANGUAGE SETTING (LANGUAGE) 7-18
7.2.7 DATE TIME SETTING 7-18
7.2.8 INPUT INSTALLATION INFORMATION 7-19
7.2.9 SETTING THE ALARM SYSTEM 7-20
7.3 ADJUSTMENT 7-22
7.3.1 NOISE LEVEL ADJUSTMENT (NOISE LEVEL) 7-22

7.3.2 ADJUSTMENT OF TARGET TRACKING FUNCTION (TT) 7-24
7.3.3 MAIN BANG SUPPRESSION ADJUSTMENT (MBS) 7-27
7.4 MAINTENANCE MENU 7-28
7.4.1 ANTENNA SAFETY SWITCH (SAFETY SWITCH) 7-28
7.4.2 INITIALIZATION OF MEMORY AREA (AREA INITIAL) 7-29
7.4.3 SAVE OF INTERNAL MEMORY DATA (CARD1/2) 7-30
7.4.4 CLEAR AND SAVE/RESTORATION OF ANTENNA OPERATION TIME (TXRX TIME) 7-31
7.4.5 UPDATE OF CHARACTER STRING DATA (STRING DATA UPDATE) 7-32

8. MAINTENANCE

8.1 ROUTINE MAINTENANCE 8-1
8.2 MAINTENANCE ON EACH UNIT 8-2
8.2.1 SCANNER UNIT NKE-1064/3710-8 8-2
8.2.2 DISPLAY UNIT NCD-4530 8-5
8.3 PERFORMANCE CHECK 8-6
8.3.1 CHECK PERFORMANCE ON TEST MENU 8-7
8.4 REPLACEMENT OF MAJOR PARTS 8-11
8.4.1 PARTS REQUIRED FOR PERIODIC REPLACEMENT 8-12
8.4.2 REPLACEMENT OF MAGNETRON 8-13
8.4.3 REPLACEMENT OF LCD MONITOR 8-23
8.4.4 REPLACEMENT OF BACKUP BATTERY 8-24

9. TROUBLESHOOTING AND AFTER-SALES SERVICE

9.1 FAULT FINDING 9-1
9.1.1 LIST OF ALARMS AND OTHER INDICATIONS 9-1
9.1.2 OPERATION CHECKING 9-6
9.1.3 FUSE CHECKING 9-6
9.2 TROUBLE SHOOTING 9-7
9.3 AFTER-SALES SERVICE 9-11
9.3.1 KEEPING PERIOD OF MAINTENANCE PARTS 9-11
9.3.2 WHEN YOU REQUEST FOR REPAIR 9-11
9.3.3 RECOMMENDED MAINTENANCE 9-11

10. DISPOSAL

10.1 DISPOSAL OF THE UNIT 10-1
10.2 DISPOSAL OF USED BATTERIES 10-1
10.3 DISPOSAL OF USED MAGNETRON 10-2
10.4 DISPOSAL OF TR-TUBE 10-2
10.5 ABOUT THE CHINA ROHS 10-3

11. SPECIFICATIONS

11.1 JMA-5352-9R, JMA-5362-8R TYPE RADAR 11-1
11.2 SCANNER (NKE-1064) 11-2
11.3 SCANNER (NKE-3710-8) 11-3
11.4 DISPLAY UNIT (NCD-4530) 11-4
11.5 PROCESSOR UNIT (NDC-1417) 11-5
11.6 TARGET TRACKING FUNCTION (OPTION) 11-7
11.7 AIS UNIT (NQA-2103) (OPTION) 11-8
11.8 PLOTTER 11-9
11.9 OPERATION UNIT (NCE-5171) 11-10
11.10 AVAILABLE INPUT SIGNAL 11-11
11.11 AVAILABLE OUTPUT SIGNAL 11-12
11.12 STANDARD CONFIGURATION 11-12
11.13 EQUIPMENT DISTANCE BETWEEN OTHER INSTRUMENTS 11-13
11.14 OTHERS (OPTION) 11-13

APPENDIX

INTERSWITCH (OPTION) NQE-3141 INSTRUCTION MANUAL

HOW TO INSERT AND REMOVE A CARD

FIG.1 BLOCK DIAGRAM OF RADAR, TYPE JMA-5352-9R, JMA-5362-8R

FIG.2 TERMINAL BOARD CONNECTION DIAGRAM, TYPE JMA-5352-9R, JMA-5362-8R

FIG.3 TERMINAL BOARD CONNECTION DIAGRAM OF RADAR AND INTERSWITCH UNIT, TYPE NQE-3141 (OPTION)

FIG.4 POWER SYSTEM DIAGRAM, TYPE JMA-5352-9R, JMA-5362-8R

FIG.5 INTERCONNECTION DIAGRAM OF RADAR PROCESS UNIT, TYPE NDC-1417

FIG.6 INTERCONNECTION DIAGRAM OF INTERFACE UNIT, TYPE NQA-2123

FIG.7 INTERCONNECTION DIAGRAM OF OPERATION UNIT, TYPE NCE-5172

FIG.8 INTERCONNECTION DIAGRAM OF OPERATION UNIT, TYPE NCE-5171 (OPTION)

FIG.9 INTERCONNECTION DIAGRAM OF LCD MONITOR, TYPE NWZ-173

FIG.10 INTERCONNECTION DIAGRAM OF MONITOR UNIT, TYPE NWZ-170 (OPTION)

FIG.11 INTERCONNECTION DIAGRAM OF SCANNER UNIT, TYPE NKE-1064

FIG.12 INTERCONNECTION DIAGRAM OF SCANNER UNIT, TYPE NKE-3710-8

FIG.13 INTERCONNECTION DIAGRAM OF POWER UNIT, TYPE NBL-315 (OPTION)

FIG.14 INTERCONNECTION DIAGRAM OF INTERSWITCH UNIT, TYPE NQE-3141 (OPTION)

FIG.15 OVER VIEW OF RADAR MENU

1	GENERAL AND EQUIPMENT COMPOSITION	1
2	NAME AND FUNCTION OF CONTROL PANEL KEYS AND FUNCTION OF SOFTWARE BUTTONS	2
3	BASIC OPERATION	3
4	MEASUREMENT OF RANGE AND BEARING	4
5	OPERATION OF ARPA AND AIS	5
6	TRUE AND FALSE ECHOES ON DISPLAY	6
7	MAINTENANCE	7
8	COUNTERMEASURES FOR TROUBLE AND ADJUSTMENT	8
9	AFTER-SALES SERVICE	9
10	DISPOSAL	10
11	SPECIFICATION	11
APPENDIX		APPENDIX

SECTION 1
GENERAL AND EQUIPMENT COMPOSITION

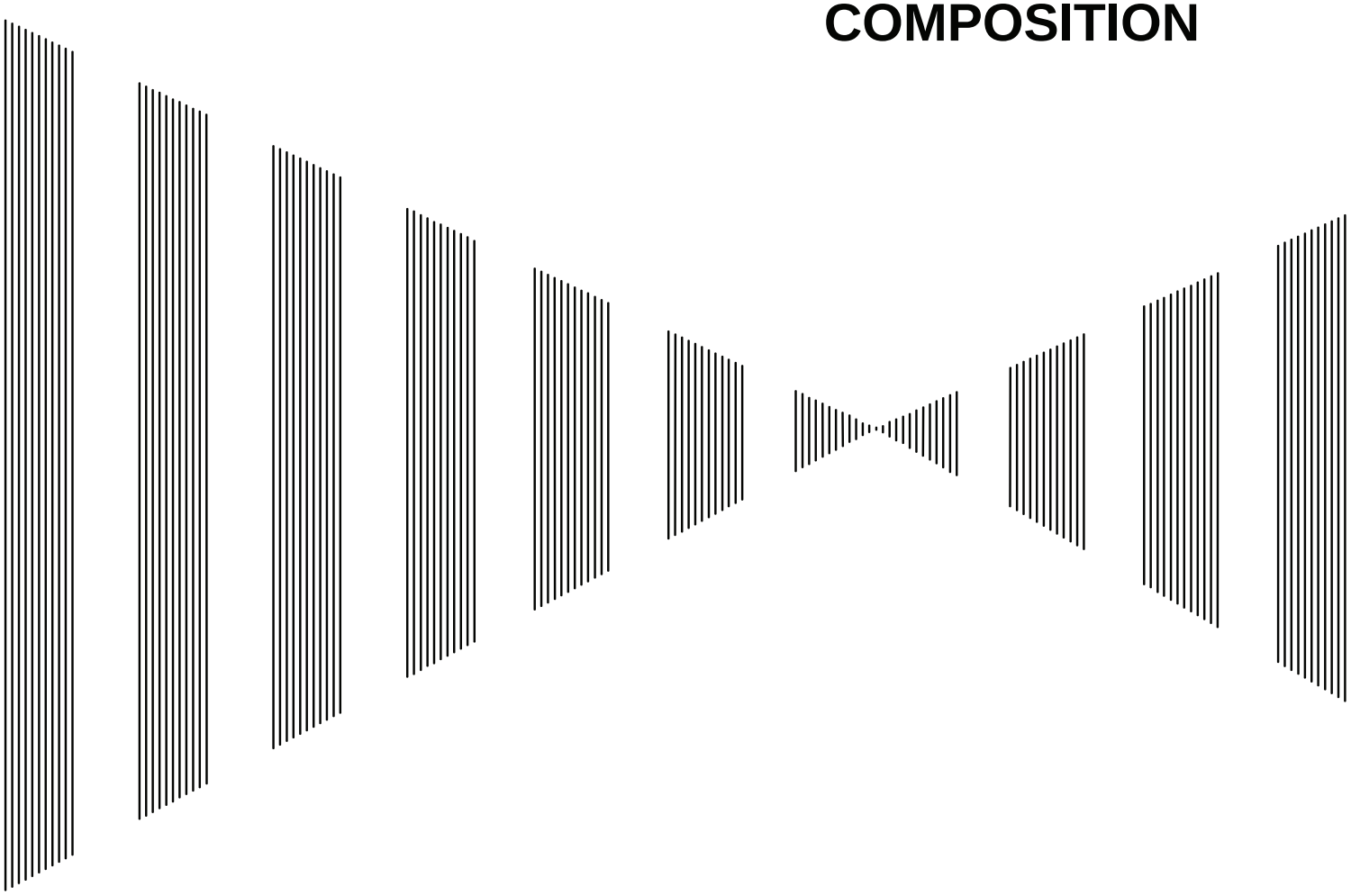

1.1 FUNCTIONS....1-1
1.2 FEATURES....1-2
1.3 CONFIGURATION....1-4
1.4 OUTSIDE DRAWINGS....1-5
1.5 GENERAL SYSTEM DIAGRAMS....1-15

1.1 FUNCTIONS

This equipment is a high-performance radar equipment consisting of a scanner unit, a transceiver unit and a high resolution color LCD display unit.

1.1.1 Function of This System

The JMA-5300MK2 series is a color radar system.
The main functions include:

- gain adjustment
- sea clutter and rain / snow clutter suppression
- interference rejection
- bearing and range measurement using a cursor, fixed/variable range markers, and electronic bearing line
- own track display
- colored own track display (7 colors) (option)
- NAV line and marker displays
- TM (True Motion) presentation
- self-diagnostic facilities
- Target Tracking (TT) functions (manual / automatic target acquisition and automatic tracking, vector and track displays and alarm displays) (option)
- simple plotter functions:
  marker and line display (up to 2000 items.)
  marker and line display (up to 20000 items.)(option)
  waypoint / route setting (option)
- 8-unit switchover (Inter switch) function (option)

1.2 FEATURES

Realization of Large, Easy-to-see Screen with High Resolution

The 19-inch color LCD with high resolution of 1280 × 1024 pixels can display radar images of 250 mm or more in diameter. Even short-range targets can also be displayed as high-resolution images.

Target Detection by Latest Signal Processing Technology

The system employs the latest digital signal processing technology to eliminate undesired clutter from the radar video signals that are obtained from the receiver with a wide dynamic range, thus improving the target detection.

Advanced Technology Based Target Tracking (TT) Functions (Option)

The target acquisition and tracking performance is enhanced by the use of the fastest DSP and tracking algorithm. So stable operation in target tracking under clutter is ensured.

- Acquisition and tracking of 100 targets for High performance edition, 30 targets for Normal edition.
- Hazardous conditions are represented by shapes and colors of symbols as well as sounds.
- Trial maneuvering functions provided. (High performance edition)
- Tracks of up to 20 target ships can be stored with a maximum of 1,500 points for each of them, and displayed distinguished by using 7 different colors.

Overlay of Radar Images, Coastlines, and Own Ship's Track

As well as operator-created NAV lines, the data of coastlines, objects such as buoys, and own ship's tracks / target tracks / AIS tracks, which is stored on the memory card can be superimpose-displayed with radar images and radar trails in all display modes including the head-up mode.
Creation / display of marks and lines (up to 2000 items).
Use of the optional plotter function enables the own track display distinguished by using 7 different colors, creation of marks and lines (up to 20000 items) and the settings of waypoints / courses.

Easy Operation with GUI

All the radar functions can be easily controlled by simply using the trackball and 2 switches to operate the buttons shown on the radar display.

Improved Day / Night Mode

Five types of background colors are available in Day / Dusk / Night mode.
Each background color can be reproduced to be suited for the user’s operating environment by simple key operation. The radar echoes and a variety of graphics can also be represented in different colors, ensuring easy-to-see displays.

Self-diagnostic Program Incorporated

The Self-diagnostic program always monitors all the functions of the system. If any function deteriorates, an alarm message will appear on the radar display and an alarm sounds at the same time. Even when the system is operating, the functionality test can be carried out. (except on some functions)

Easy Interswitch Operation (Option)

If an interswitch unit (option) is connected, up to four JMA-5300MK2 radars can be switched over by performing simple operation.
* An interswitch (NQE-3141) is needed separately.

Various Functions

- RADAR Trails
- TM (True Motion) display
- Head-up / North-up / Course-up display
- Own ship's track display
- Automatic Acquisition / Activation function (Option)

1.3 CONFIGURATION

Specified of scanner, and categories of ship/craft for SOLAS V

Radar Model	Antenna Type	Transmitted Output Power	Band	Rate of Rotation
JMA-5352-9R	9 ft slot antenna	50 kW	X	Approx. 17/14 rpm
JMA-5362-8R	8 ft slot antenna	60 kW	S	Approx. 17/14 rpm

*The class of emission: P0N (All scanner types)

Radar ConFig. uration and Ship's Mains

Radar Model	Scanner Unit	Display Unit	Ship's Mains
JMA-5352-9R	NKE-1064	NCD-4530	DC 24 V AC 220 V, 3 Φ, 50/60 Hz
JMA-5362-8R	NKE-3710-8	NCD-4530	DC 24 V AC 220 V, 3 Φ, 50/60 Hz

Notes:

1. An optional POWER SUPPLY NBA-5111 is necessary for using Ship's Mains 100/110/115/220/230/240 VAC,1 ϕ,50/60 Hz.
2. When using the ship's mains of AC440V as the radar power source, a step-down transformer shall be used.
2. The DISPLAY UNIT NCD-4530 has a separate structure consisting of the following:
   LCD MONITOR NWZ-173
   CONTROL UNIT NCM-853
   The control unit NCM-853 is consisting of the following
   RADAR PROCESS UNIT NDC-1417
   OPERATION UNIT NCE-5172

1.4 OUTSIDE DRAWINGS

Fig. 1.1 Outside Drawing of SCANNER UNIT, Type NKE-1064

Fig. 1.2 Outside Drawing of SCANNER UNIT, Type NKE-3710-8

Fig. 1.3 Outside Drawing of SCANNER UNIT, Type NBL-315

Fig. 1.4 Outside Drawing of LCD MONITOR, Type NWZ-173

Fig. 1.5 Outside Drawing of LCD MONITOR, Type NWZ-173 with Stand MPBC42446 (option)

Fig. 1.6 Outside Drawing of RADAR PROCESS UNIT, Type NDC-1417

Fig. 1.7 Outside Drawing of OPERATION UNIT, Type NCE-5172

Fig. 1.8 Outside Drawing of OPERATION UNIT, Type NCE-5171 (option)

Fig. 1.9 Outside Drawing of RECTIFIER UNIT, Type NBA-5111 (option)

OUTLINE DIMENSIONS		PERMISSIBLE OUTLINE DIMENSIONAL DEVIATIONS	PERMISSIBLE MOUNTING DIMENSIONAL DEVIATIONS
OVER	TO		
3	6	±0.5	±0.5
6	30	±1	
30	120	±1.5	
120	400	±2.5	±1
400	1000	±4	±2
1000	2000	±6	±3
2000	4000	±8	

外形寸法		外形寸法許容差	取付寸法許容差
を超え			
3	6	±0.5	±0.5
6	30	±1	
30	120	±1.5	
120	400	±2.5	±1
400	1000	±4	±2
1000	2000	±6	±3
2000	4000	±8	

MASS APPROX. 100 kg

UNIT mm

COLOR MUNSELL GRAY

質量 約 100 kg

単位 mm

塗装色 マンセル グレー

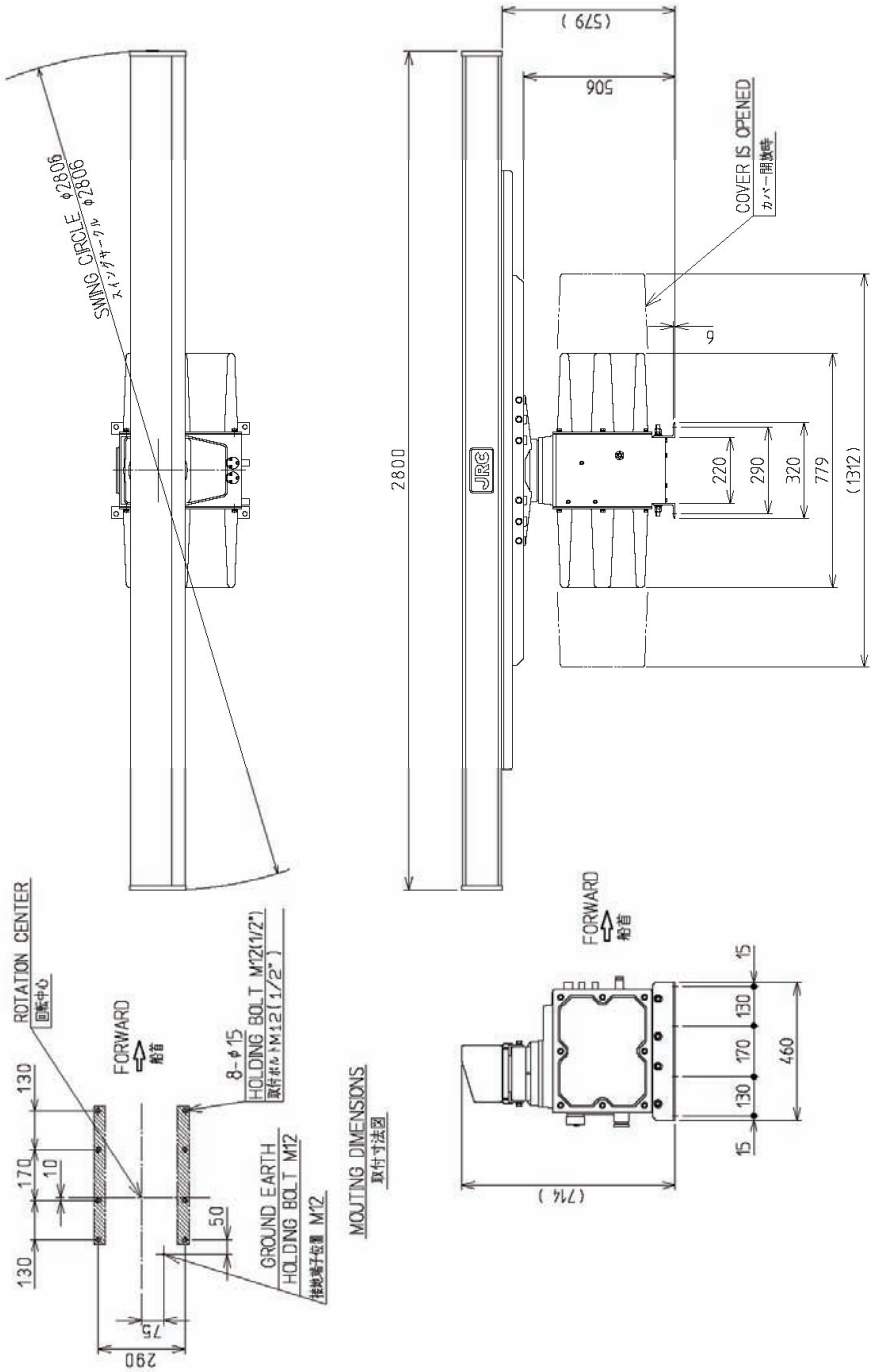

Fig. 1.1 Outside Drawing of SCANNER UNIT, Type NKE-1064

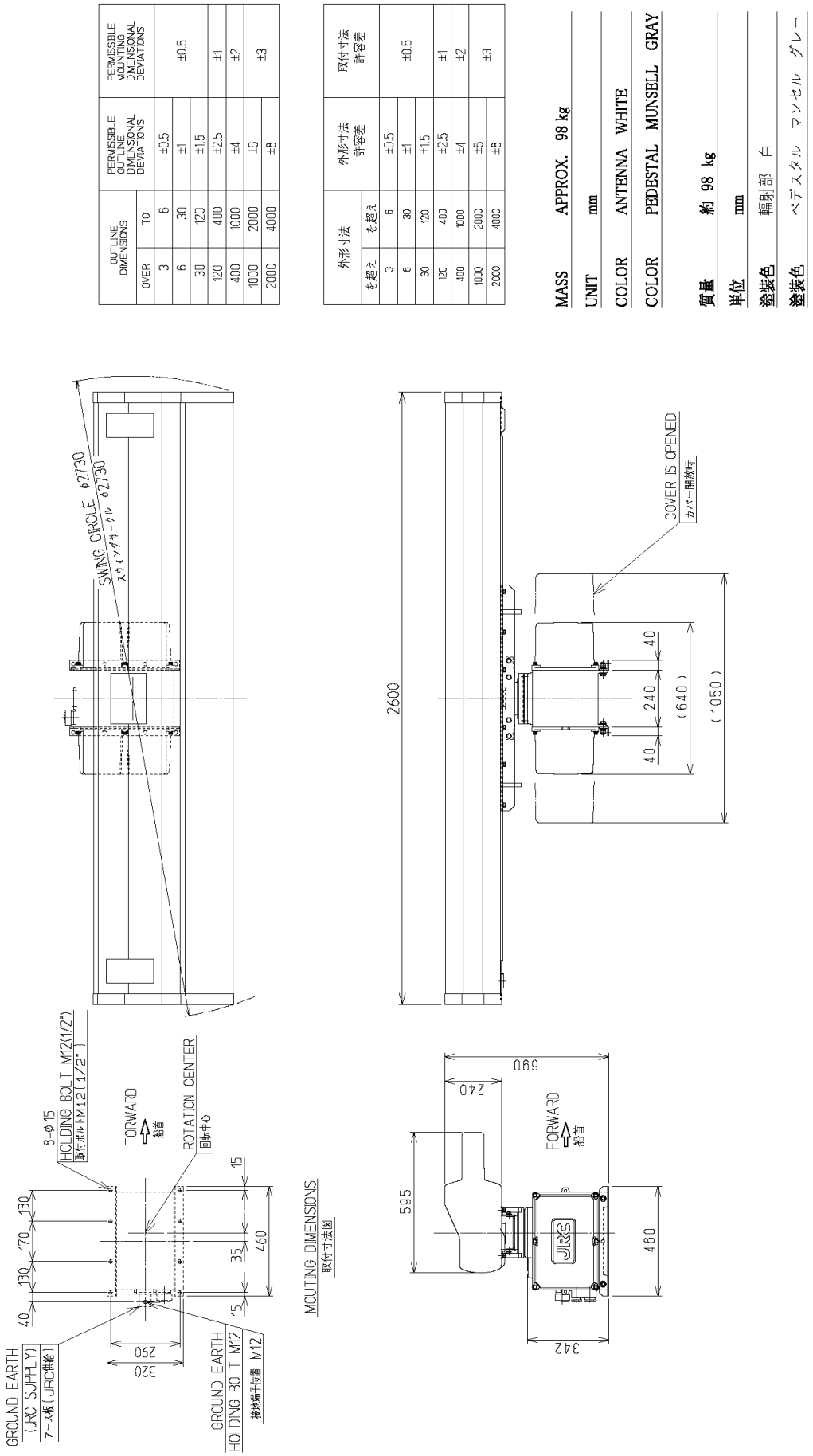

Fig. 1.2 Outside Drawing of SCANNER UNIT, Type NKE-3710-8

OUTLINE DIMENSIONS OVER	TO	PERMISSIBLE OUTLINE DIMENSIONAL DEVIATIONS	PERMISSIBLE MOUNTING DIMENSIONAL DEVIATIONS
3	6	±0.5	±0.5
6	30	±1	
30	120	±1.5	±1
120	400	±2.5	±2
400	1000	±4	±3
1000	2000	±6	
2000	4000	±8	

外形寸法 を超え	以下	外形寸法許容差	取付寸法許容差
3	6	±0.5	±0.5
6	30	±1	
30	120	±1.5	±1
120	400	±2.5	±2
400	1000	±4	
1000	2000	±6	±3
2000	4000	±8	

MASS APPROX. 20 kg

UNIT mm

質量 約 20 kg

単位 mm

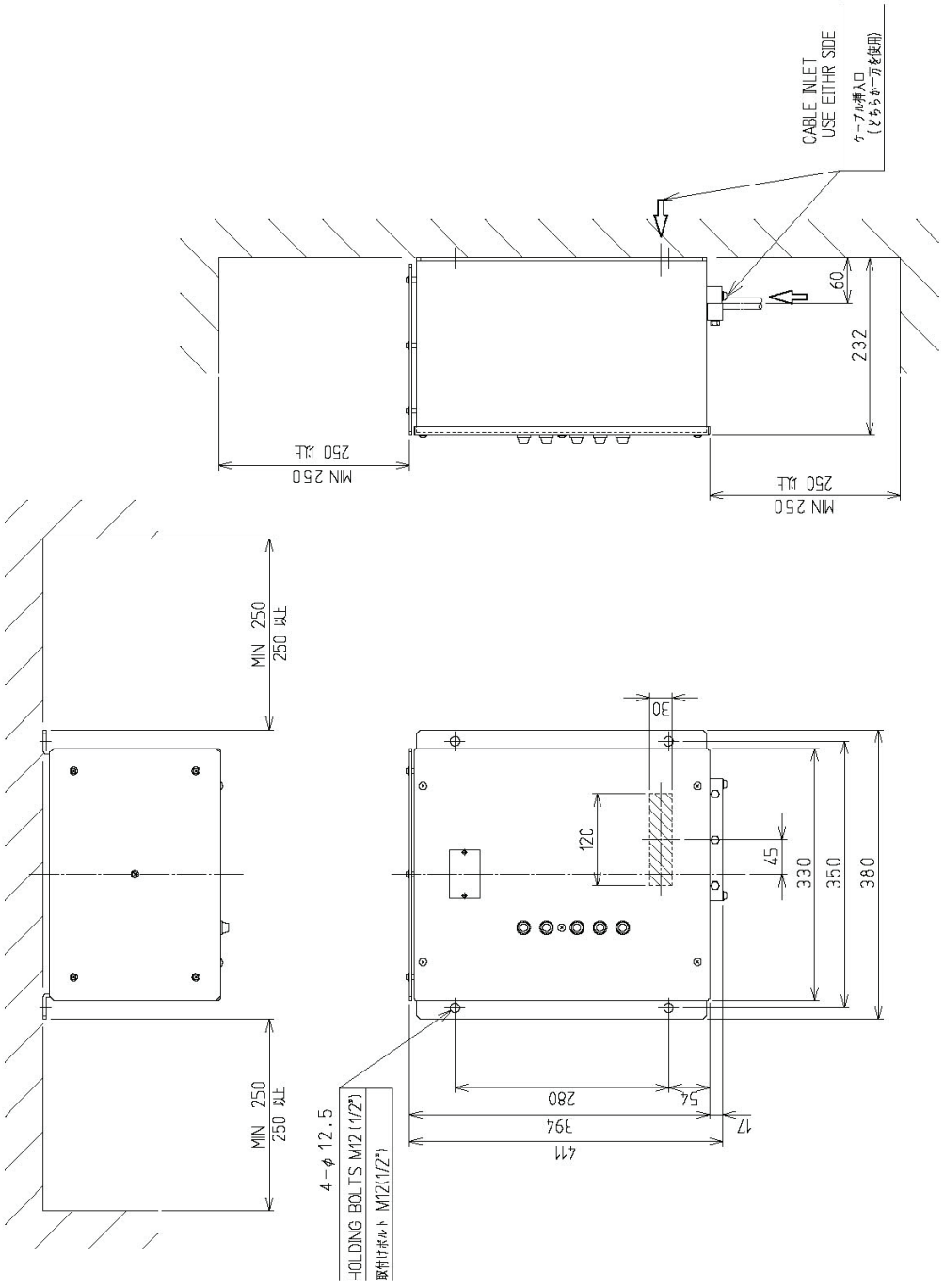

Fig. 1.3 Outside Drawing of Power Unit, Type NBL-315

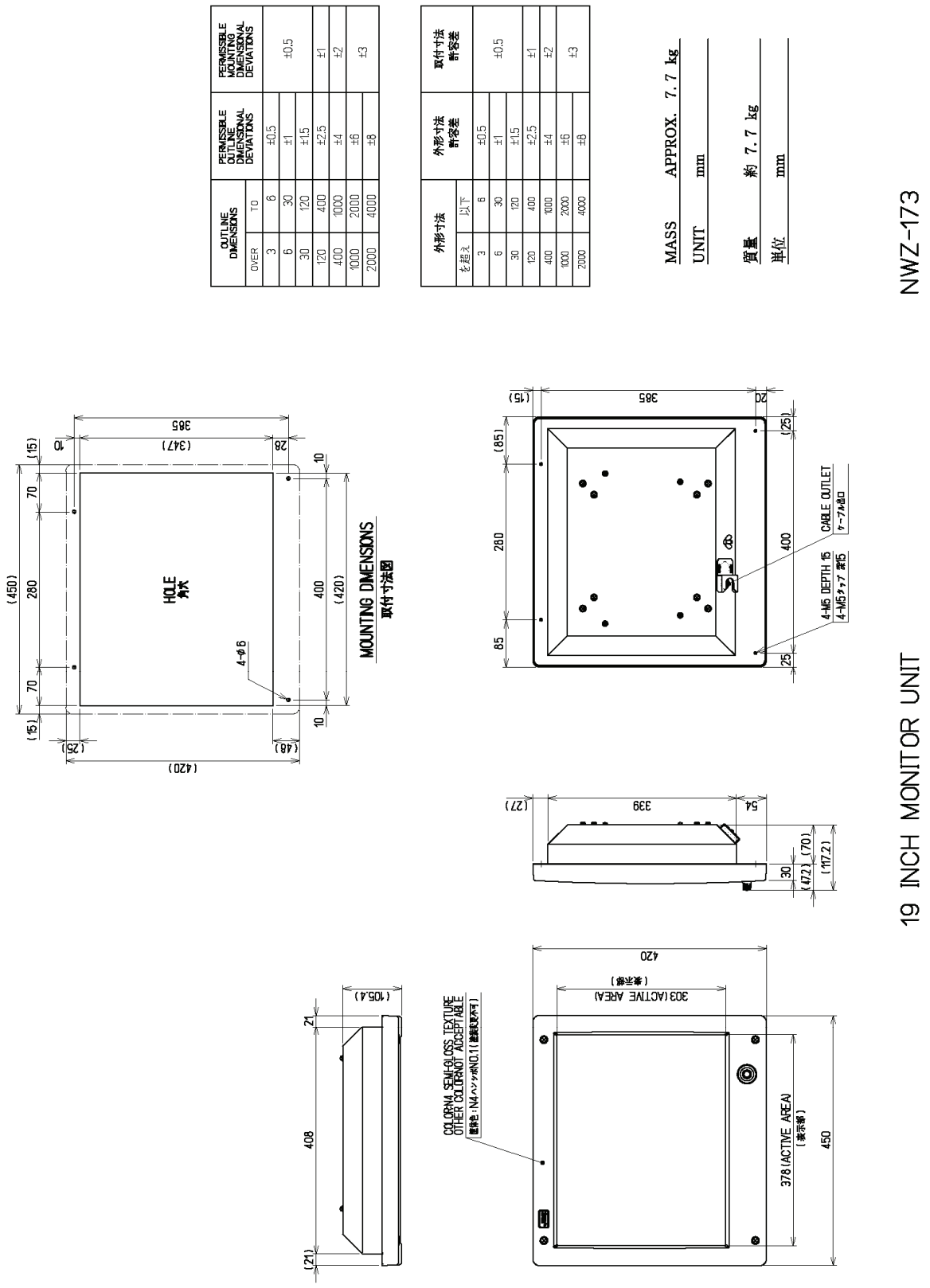

Fig. 1.4 Outside Drawing of LCD MONITOR, Type NWZ-173

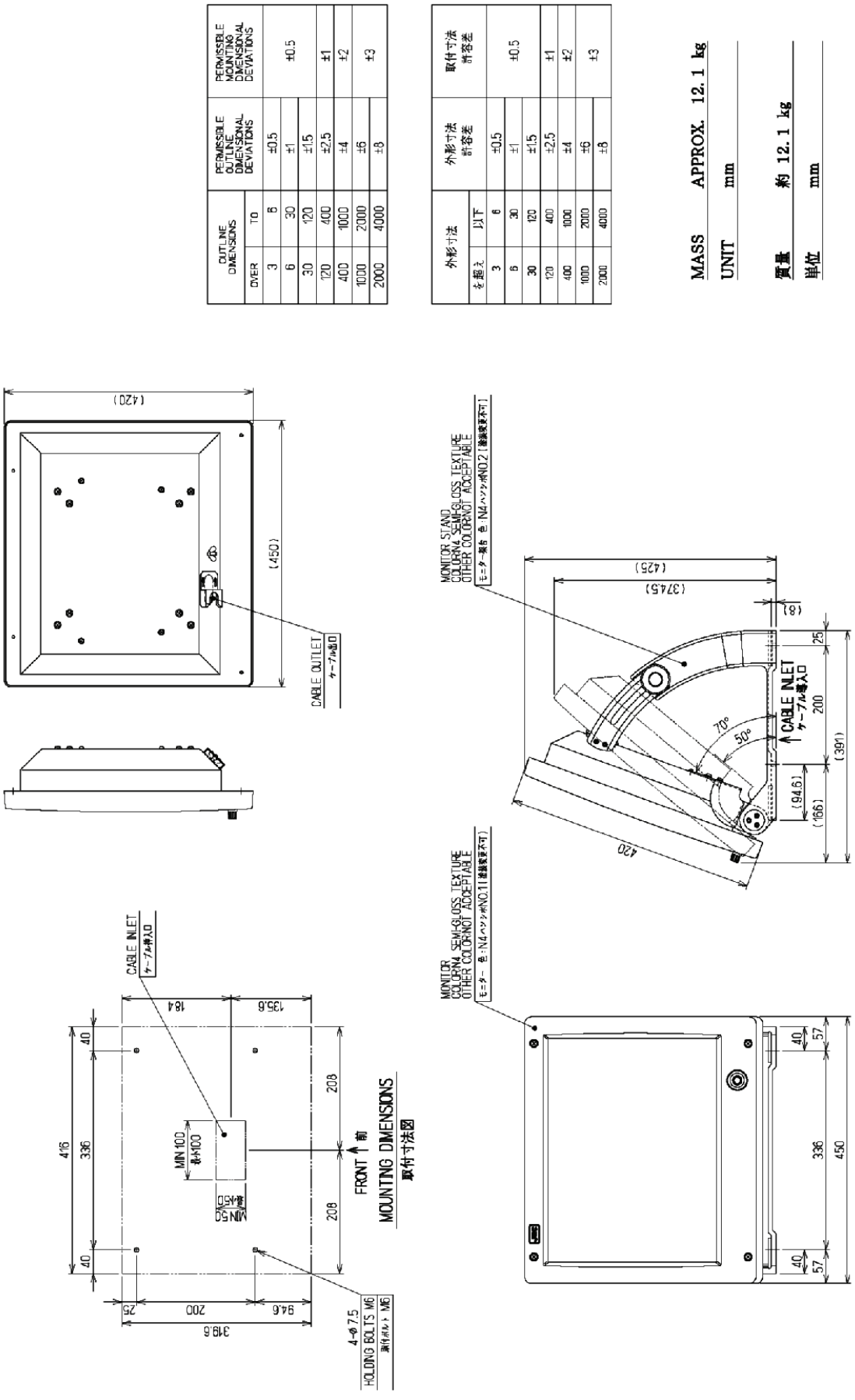

Fig. 1.5 Outside Drawing of LCD MONITOR, Type NWZ-173 with STAND MPBC42446 (option)

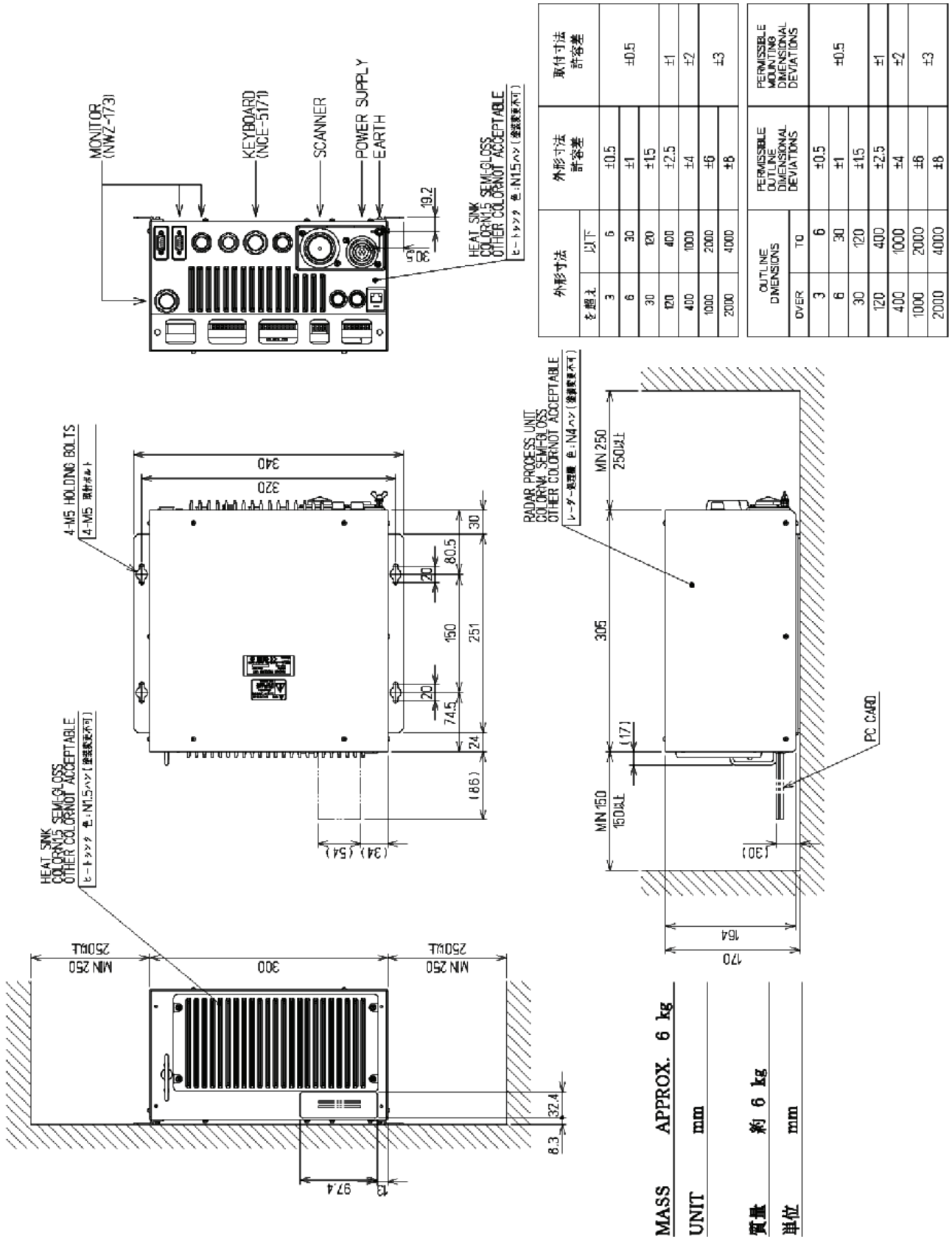

外形寸法 を超え	以下	外形寸法 許容差	取付寸法 許容差
3	6	±0.5	±0.5
6	30	±1	
30	120	±1.5	±1
120	400	±2.5	±2
400	1000	±4	
1000	2000	±6	±3
2000	4000	±8	

OUTLINE DIMENSIONS OVER	TO	PERMISSIBLE OUTLINE DIMENSIONAL DEVIATIONS	PERMISSIBLE MOUNTING DIMENSIONAL DEVIATIONS
3	6	±0.5	±0.5
6	30	±1	
30	120	±1.5	±1
120	400	±2.5	±2
400	1000	±4	
1000	2000	±6	±3
2000	4000	±8	

Fig. 1.6 Outside Drawing of RADAR PROCESS UNIT, Type NDC-1417

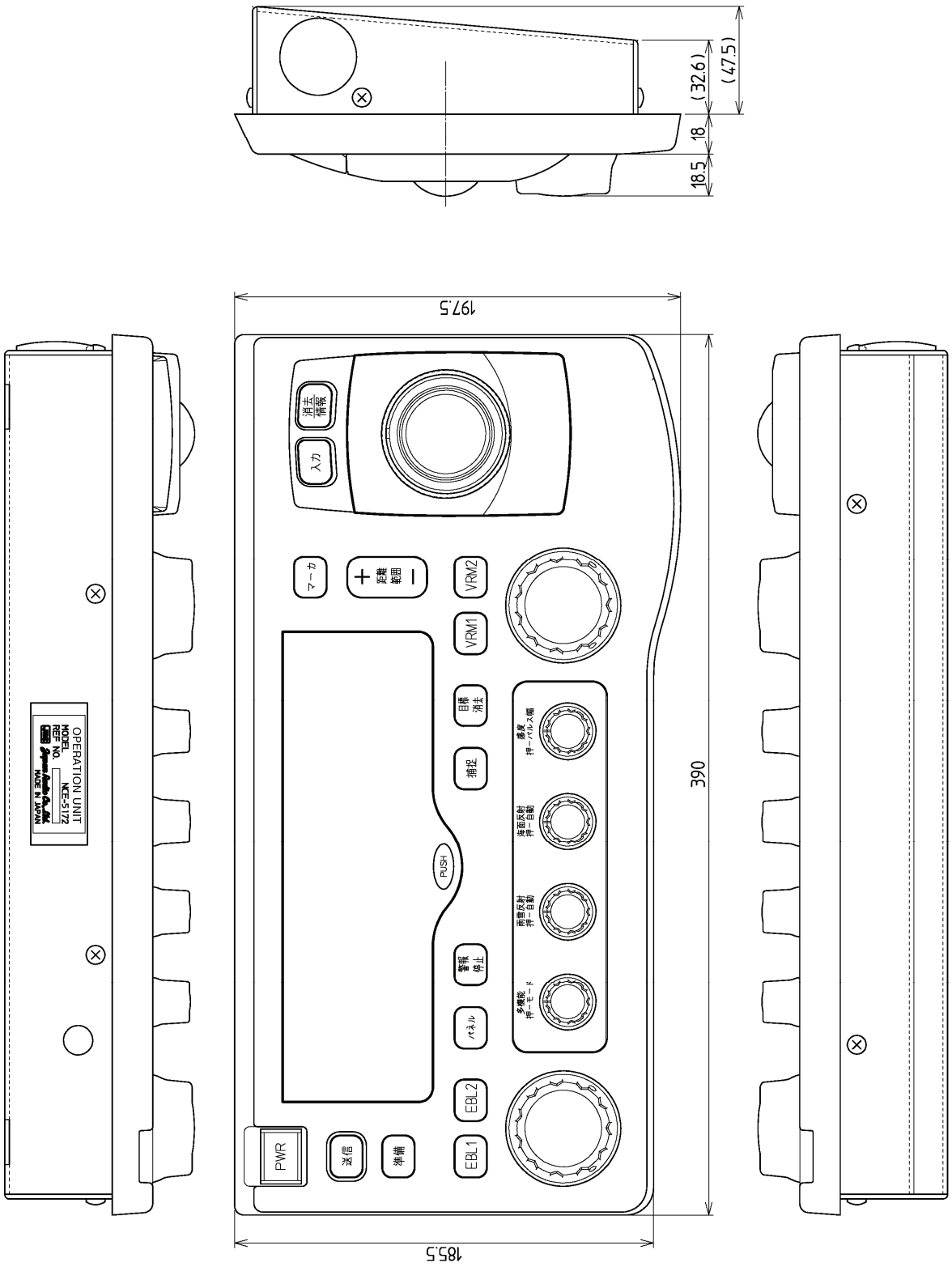

Fig. 1.7 Outside Drawing of OPERATION UNIT, Type NCE-5172

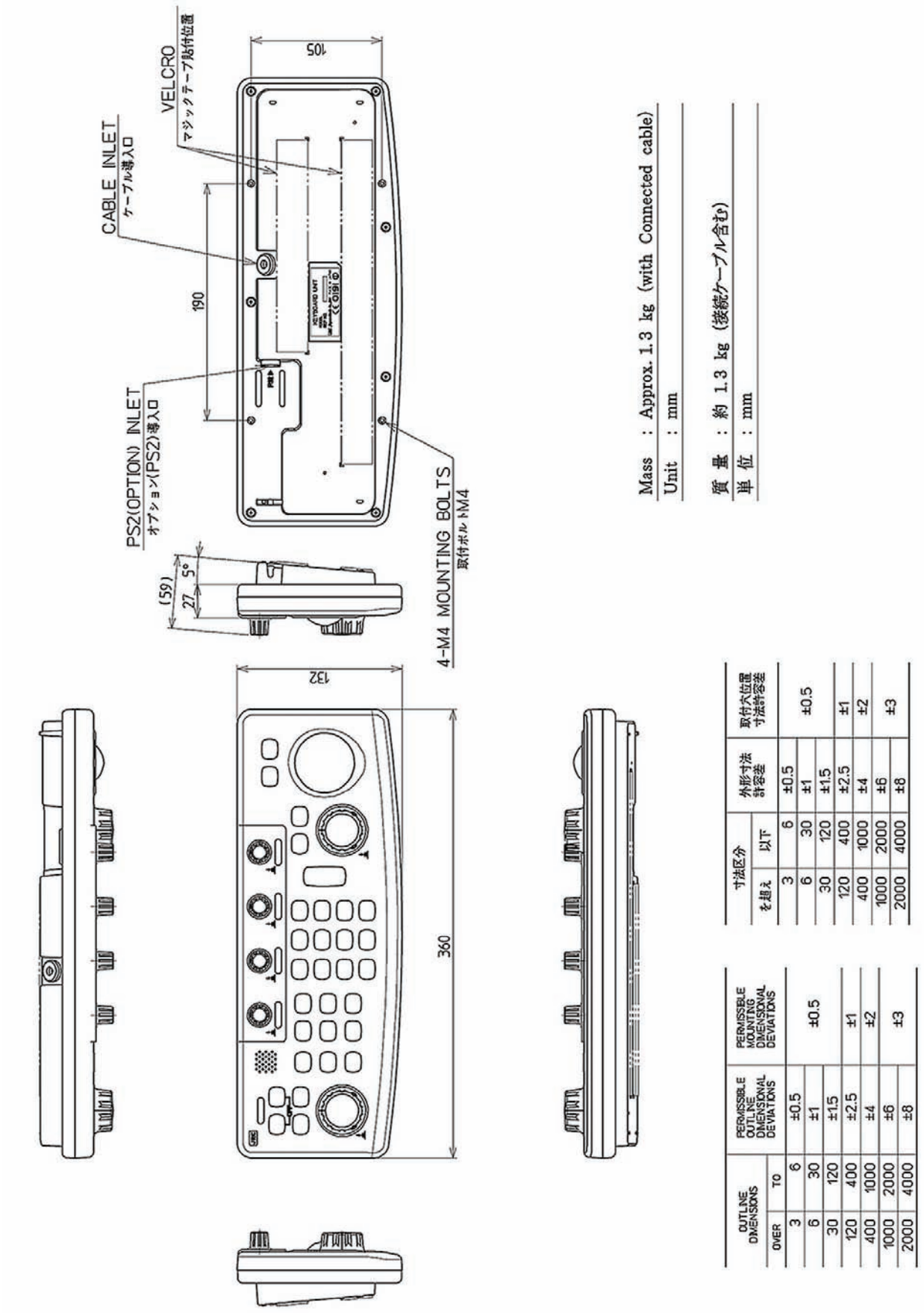

OUTLINE DIMENSIONS		PERMISSIBLE OUTLINE DIMENSIONAL DEVIATIONS
OVER	TO	
3	6	±0.5
6	30	±1
30	120	±1.5
120	400	±2.5
400	1000	±4
1000	2000	±6
2000	4000	±8

PERMISSIBLE MOUNTING DIMENSIONAL DEVIATIONS
±0.5
±1
±2.5
±4
±6
±8

寸法区分		外形寸法許容差	取付穴位置寸法許容差
を超え	以下		
3	6	±0.5	±0.5
6	30	±1	
30	120	±1.5	
120	400	±2.5	±1
400	1000	±4	±2
1000	2000	±6	±3
2000	4000	±8	

Fig. 1.8 Outside Drawing of OPERATION UNIT, Type NCE-5171 (option)

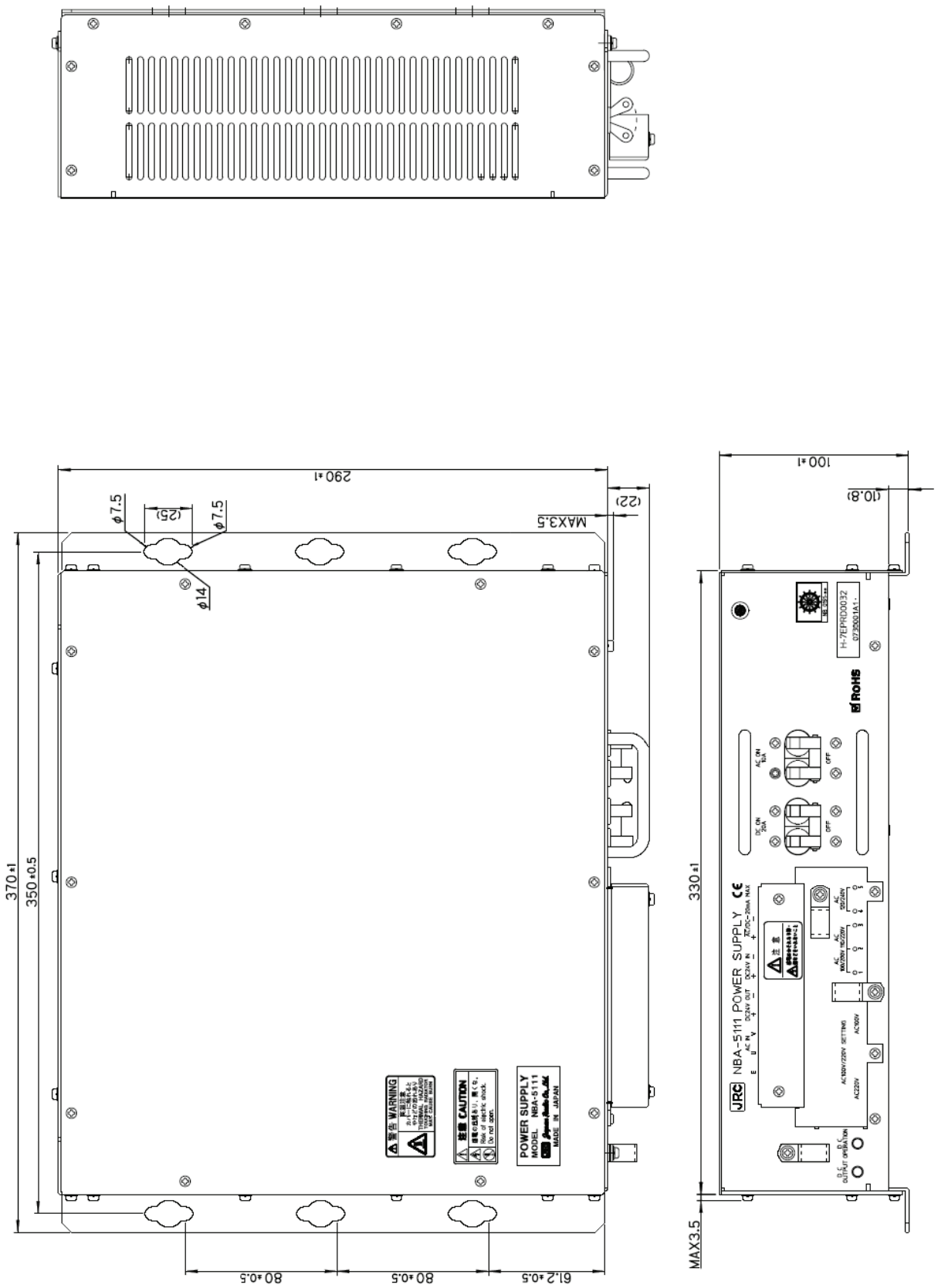

Fig. 1.9 Outside Drawing of RECTIFIER UNIT, Type NBA-5111 (option)

1.5 GENERAL SYSTEM DIAGRAMS

Fig. 1.10 General System Diagram of RADAR, Type JMA-5352-9R

Fig. 1.11 General System Diagram of RADAR, Type JMA-5362-8R

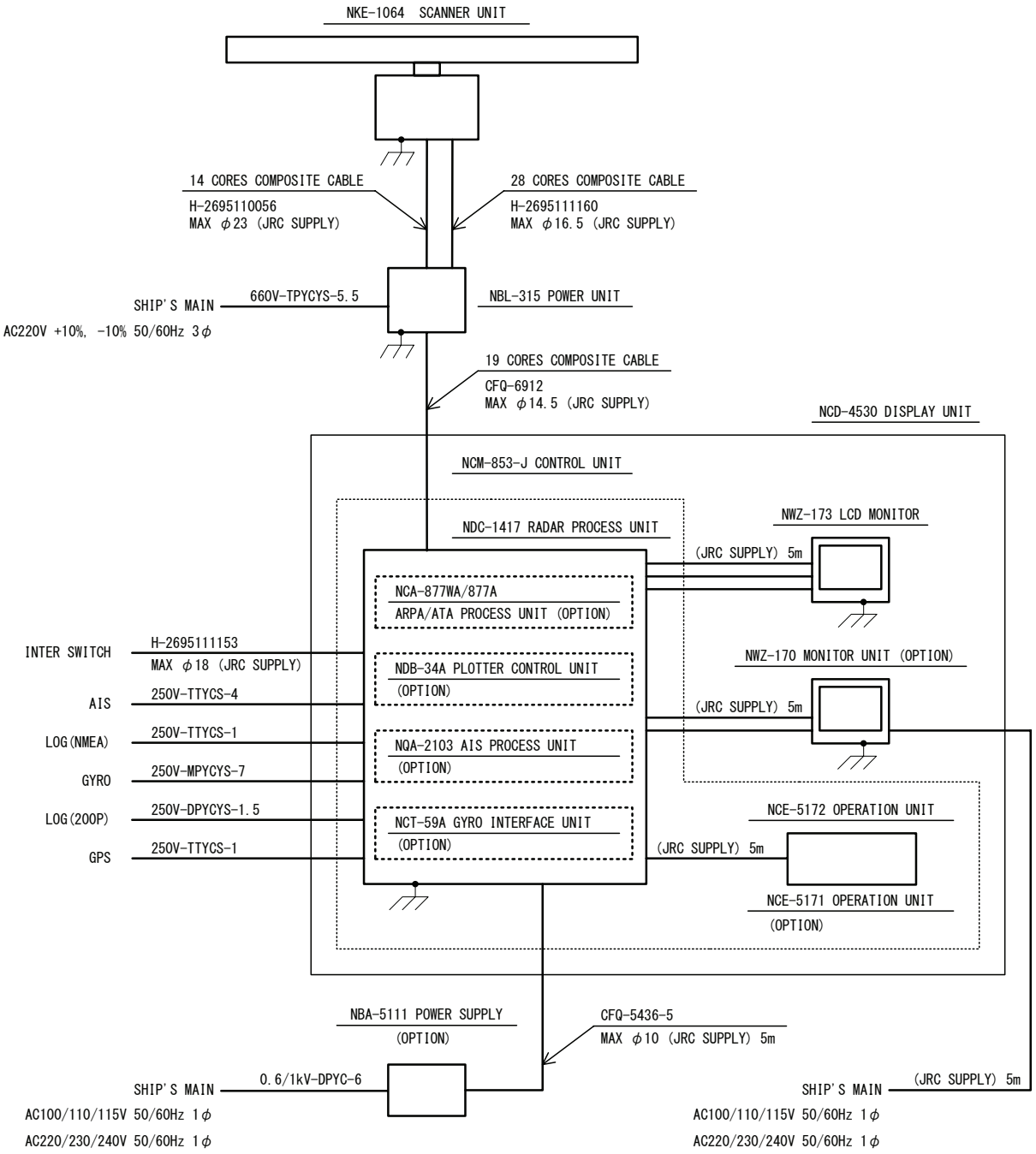

NOTE: Eliminating the interference on frequencies used for marine communications and navigation due to operation of the radar.
All cables of the radar are to be run away from the cables of radio equipment.
(Ex. Radiotelephone. Communications receiver and direction finder, etc.)
Especially inter-wiring cables between scanner unit and display unit of the radar should not be run parallel with the cables of radio equipment.

Fig. 1.10 General System Diagram of RADAR, Type JMA-5352-9R

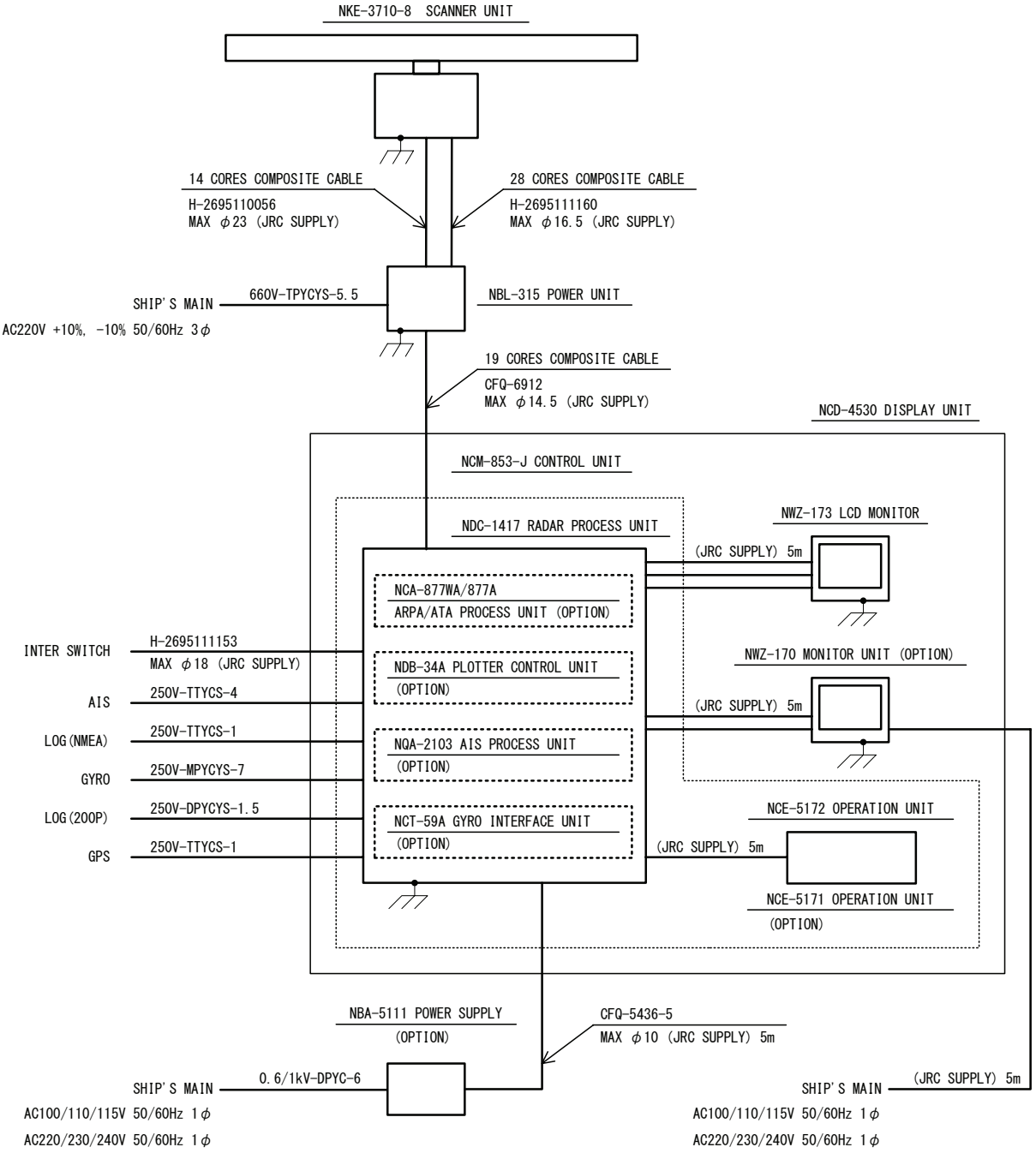

NOTE: Eliminating the interference on frequencies used for marine communications and navigation due to operation of the radar.
All cables of the radar are to be run away from the cables of radio equipment.
(Ex. Radiotelephone. Communications receiver and direction finder, etc.)
Especially inter-wiring cables between scanner unit and display unit of the radar should not be run parallel with the cables of radio equipment.

Fig. 1.11 General System Diagram of RADAR, Type JMA-5362-8R

SECTION 2
NAMES AND FUNCTIONS OF CONTROL PANEL KEYS AND FUNCTIONS OF SOFTWARE BUTTONS

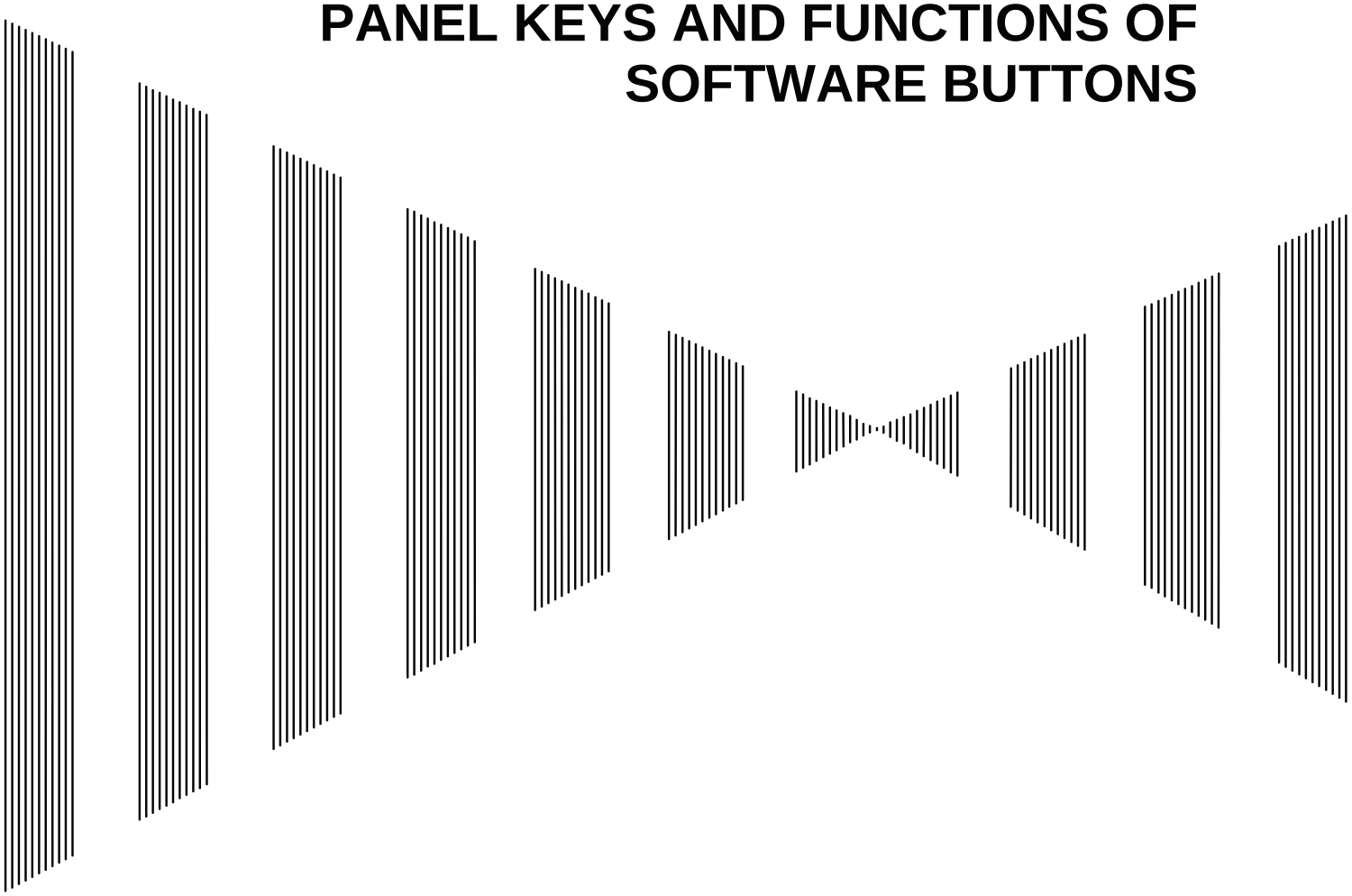

2.1 NAMES OF DISPLAY 2-1
2.2 NAMES AND FUNCTIONS OF CONTROL PANEL KEYS 2-10
2.3 FUNCTIONS OF SOFTWARE BUTTONS 2-15

2.1 NAMES OF DISPLAY

Example of screen display

In this example, the screen is divided into a number of areas and the names in each area are indicated.

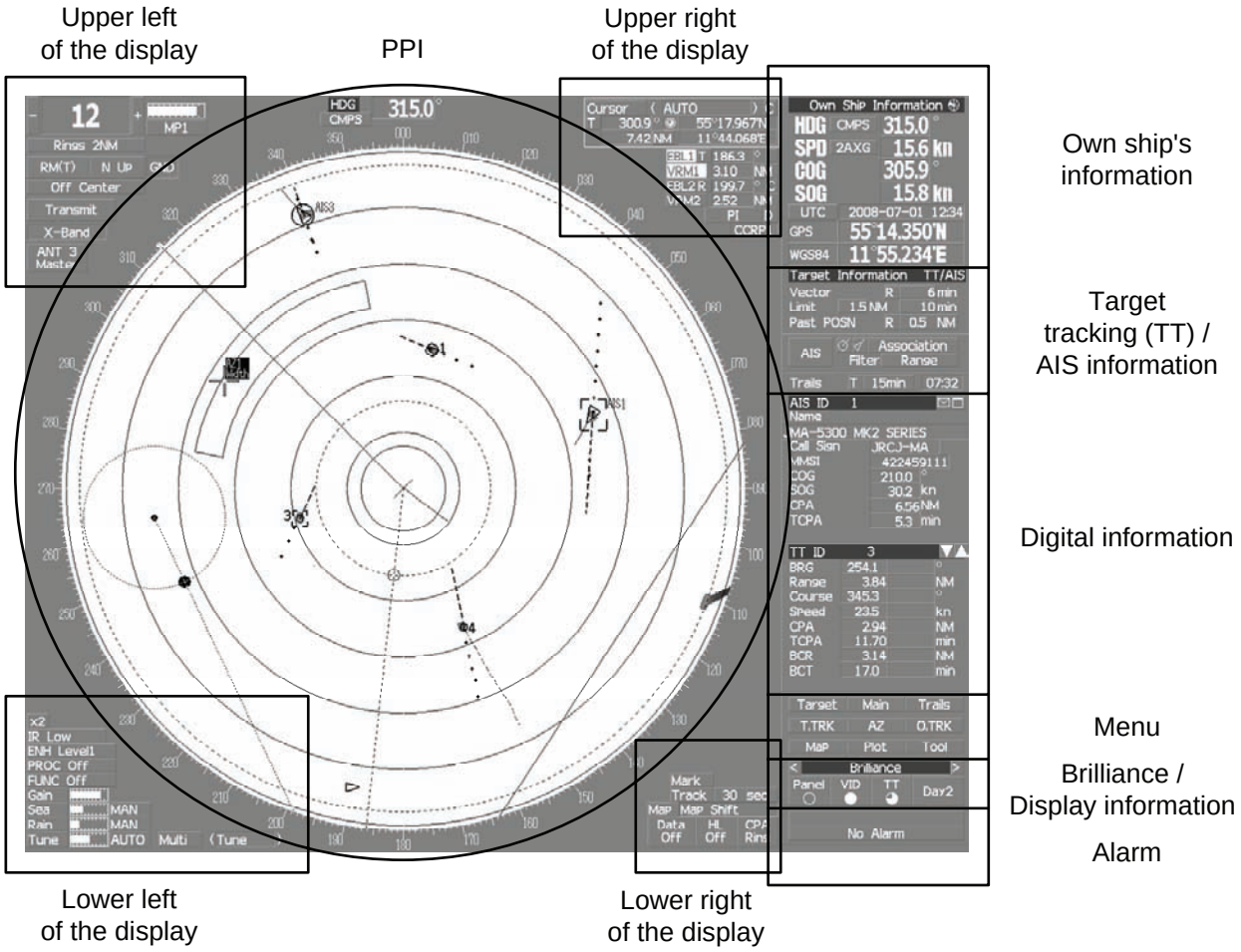

PPI

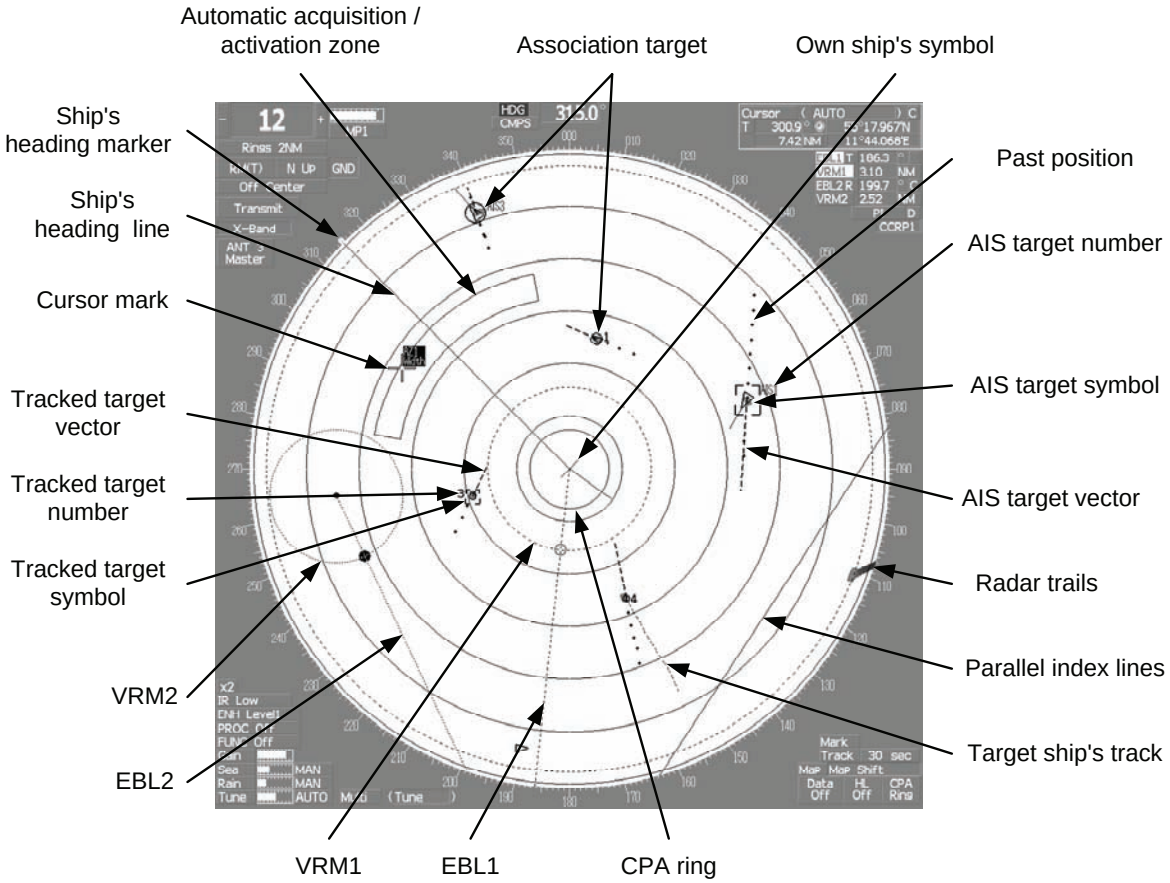

Upper left of the display

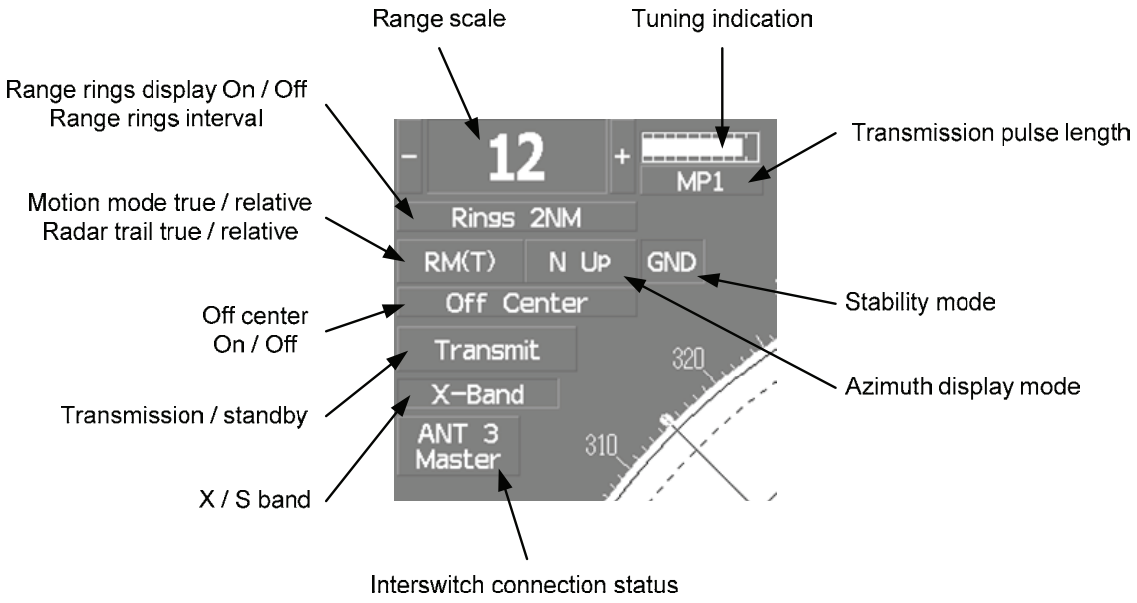

About ground and sea stabilization

Speed sensor source is MAN, LOG, 2AXW

If Set/Drift Setting menu is on : GND (Ground stabilization)

If Set/Drift Setting menu is off : Sea (Sea stabilization)

Speed sensor source is 2AXG, GPS : GND (Ground stabilization)

Lower left of the display

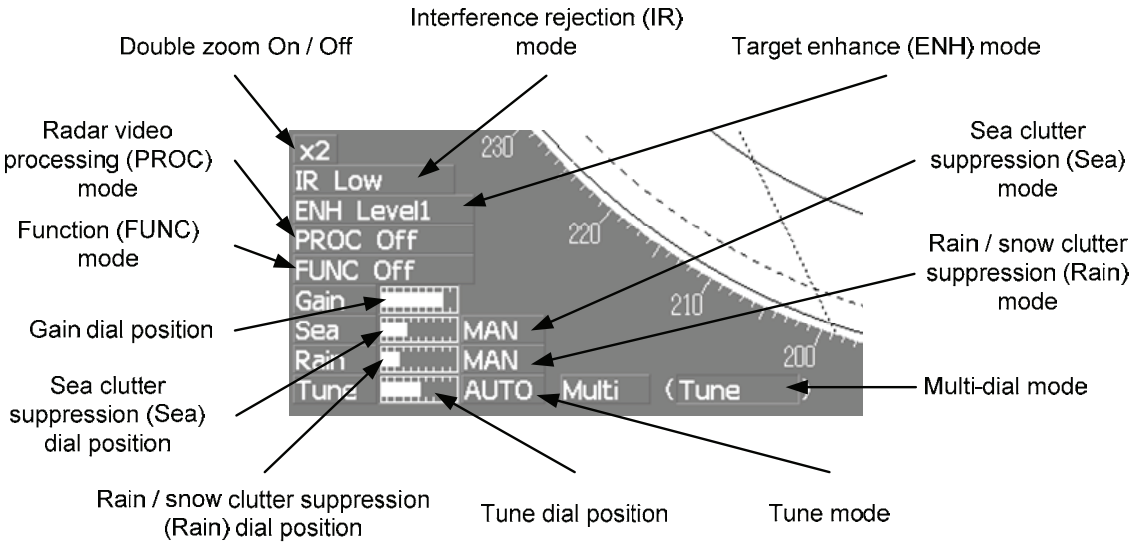

Upper right of the display

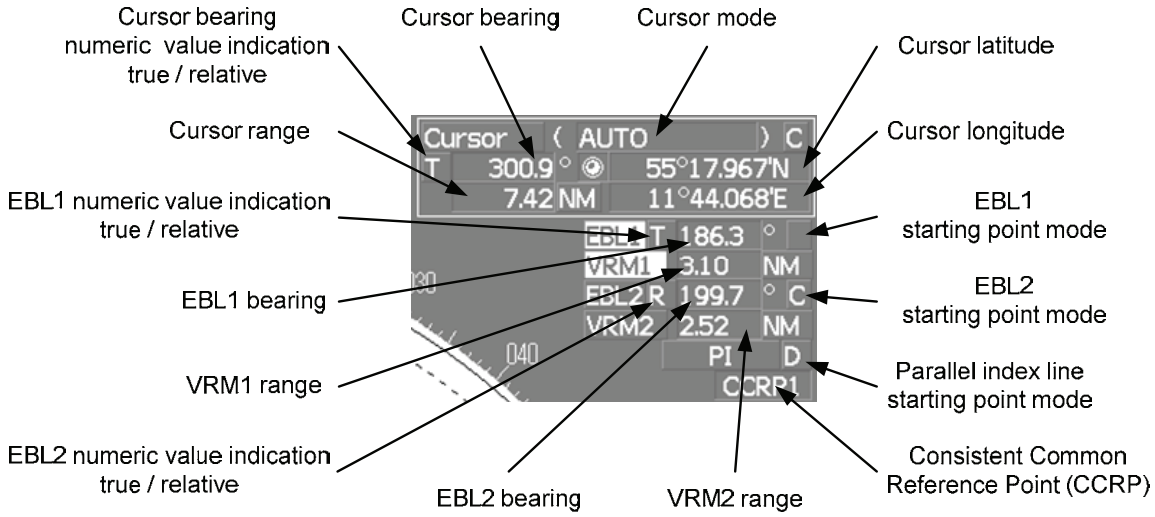

Lower right of the display

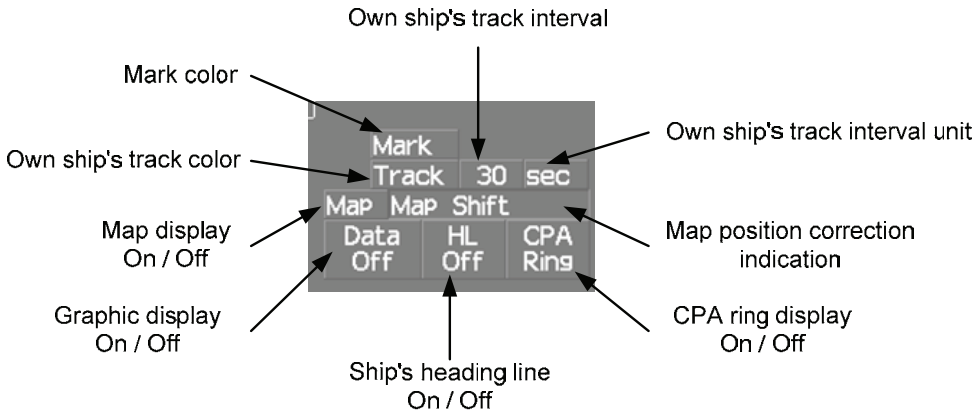

Own ship's information

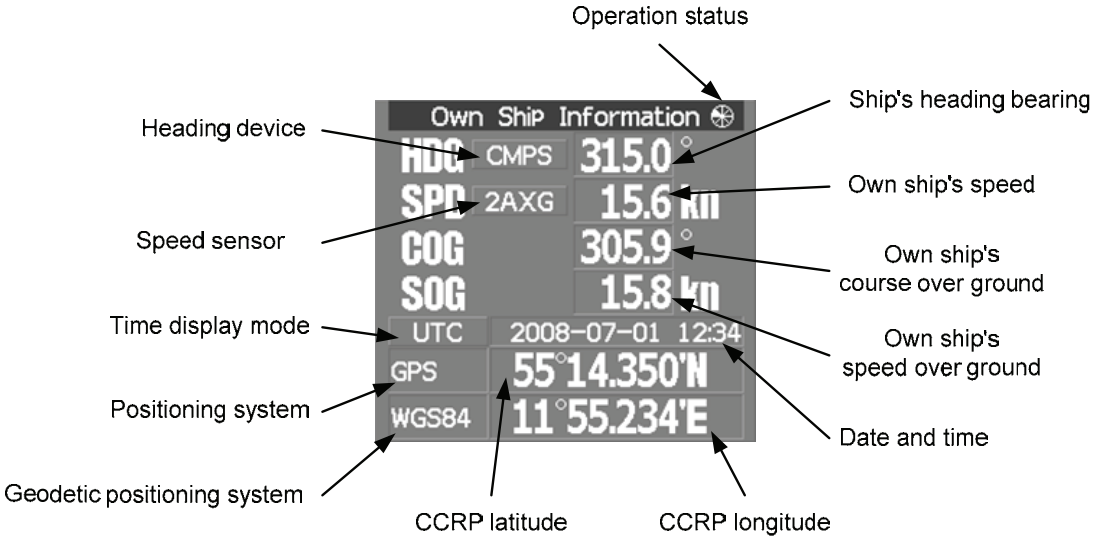

About time display mode

UTC : Universal Time Coordinate
UTC(S) : UTC (System Time)
LMT : Local Mean Time
LMT(S) : LMT (System Time)

Target tracking (TT) / AIS information

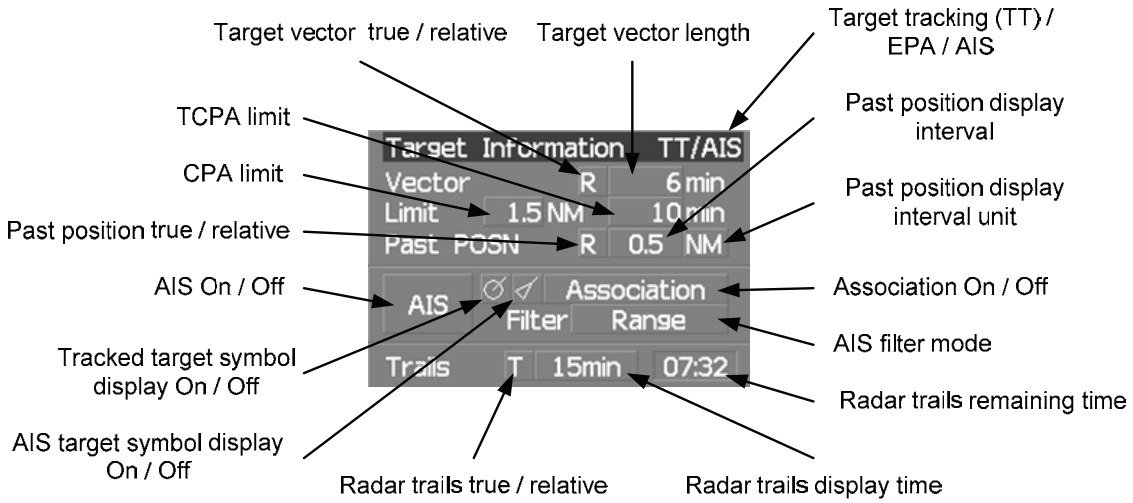

Digital information: AIS target information

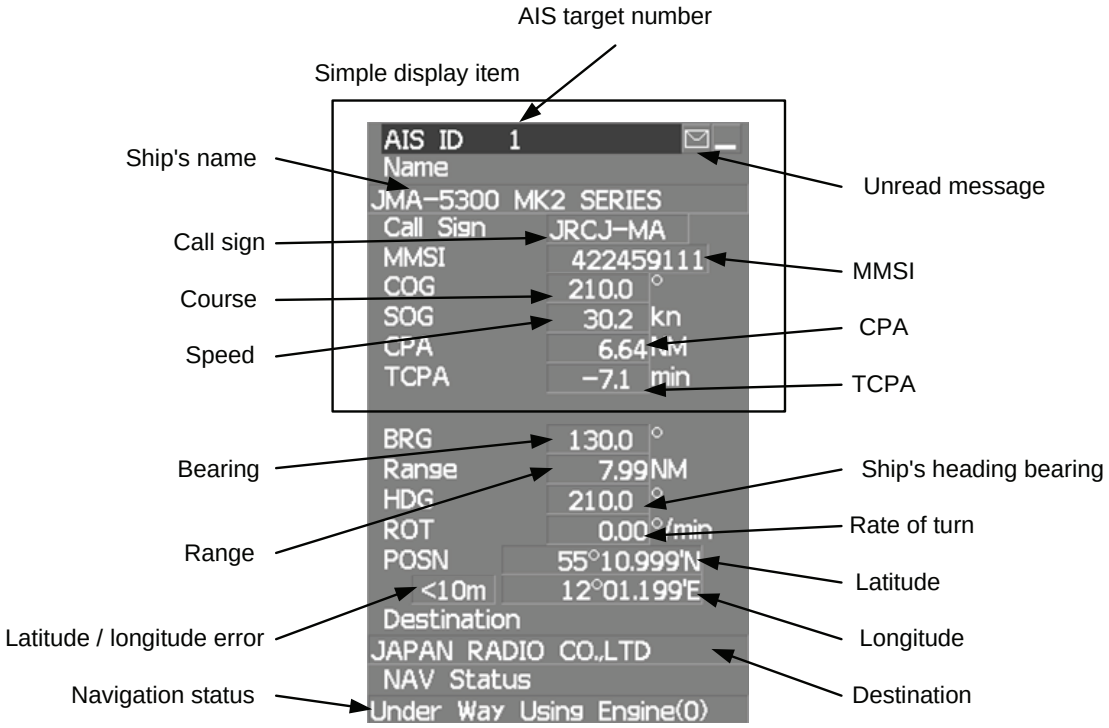

Digital information: Tracked target information

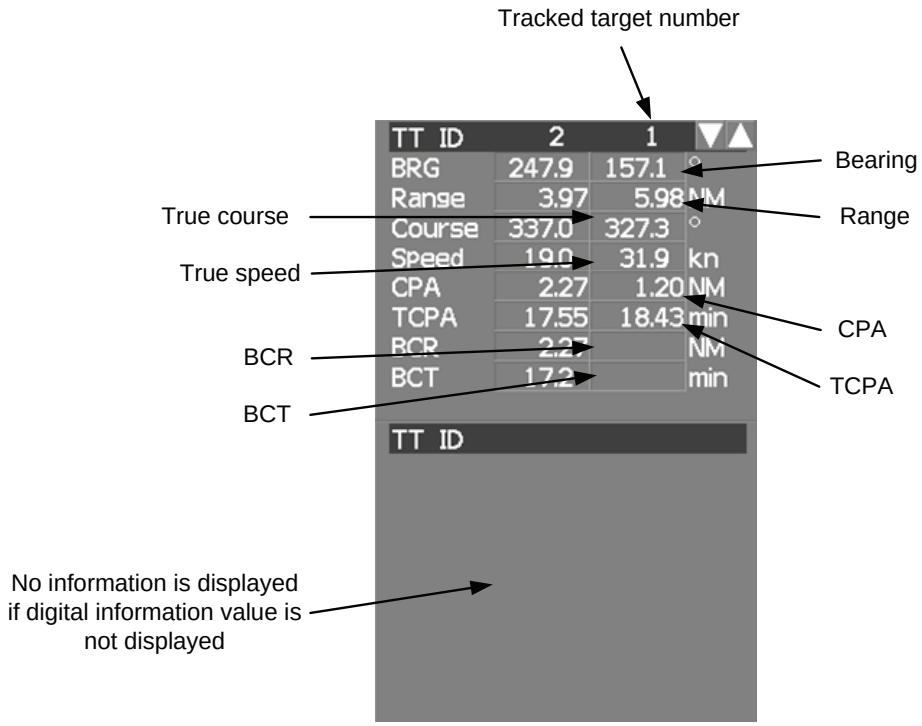

Digital information: Enhancement of cursor position numeric value indication

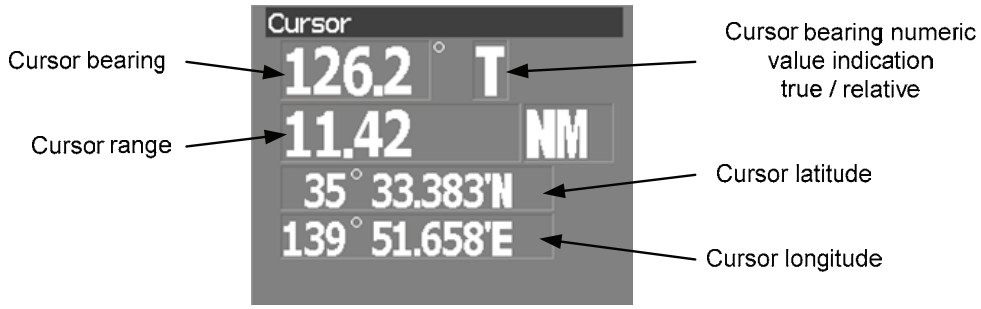

Digital information: Enhancement of EBL / VRM numeric value display

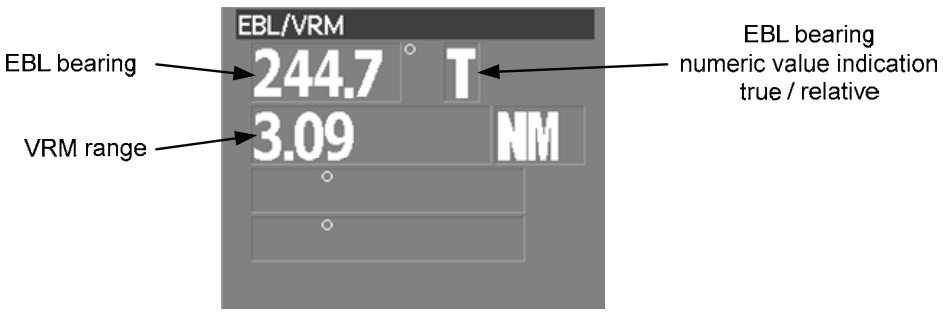

Digital information: Navigation information

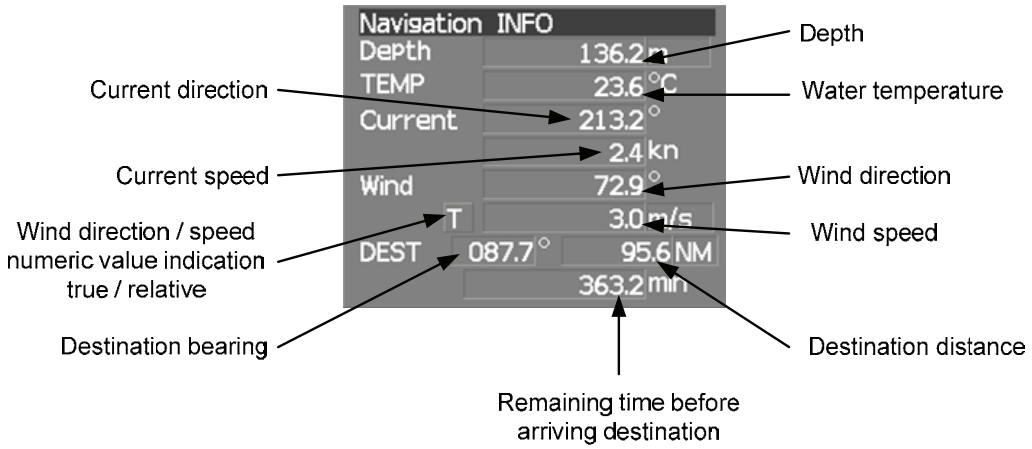

Digital information: Depth indication

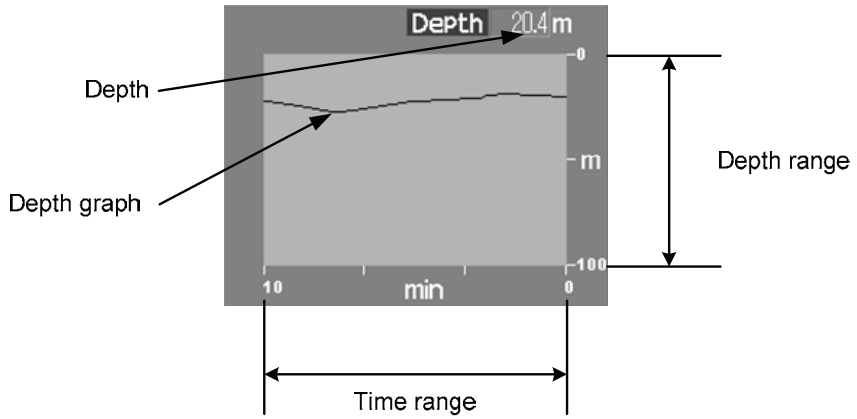

Digital information: Water temperature indication

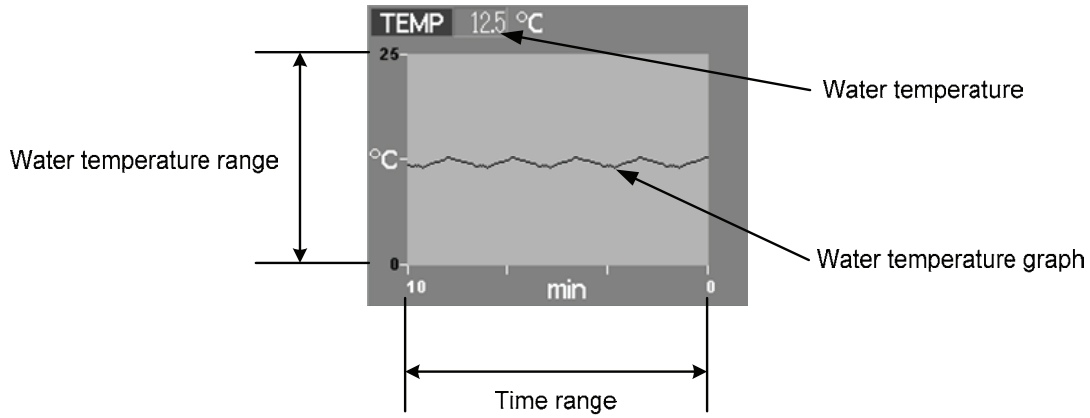

Digital information: Wind direction / speed

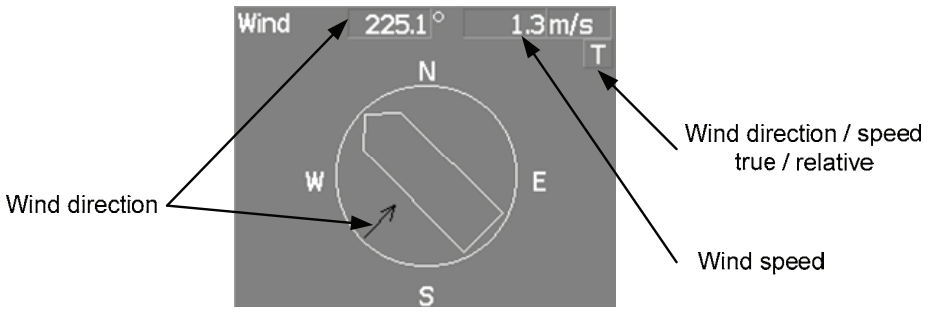

Digital information: Course bar

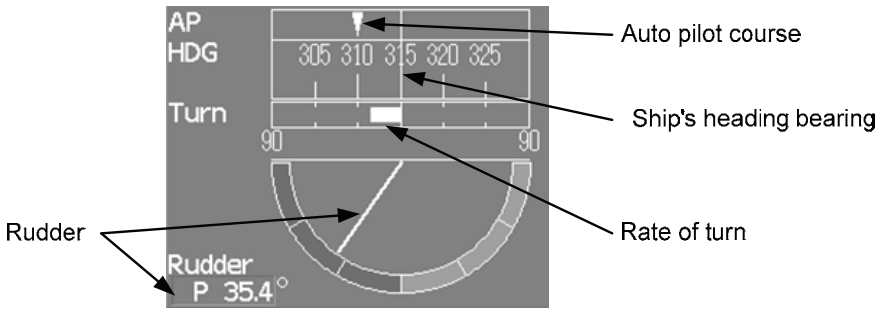

Digital information: Marker

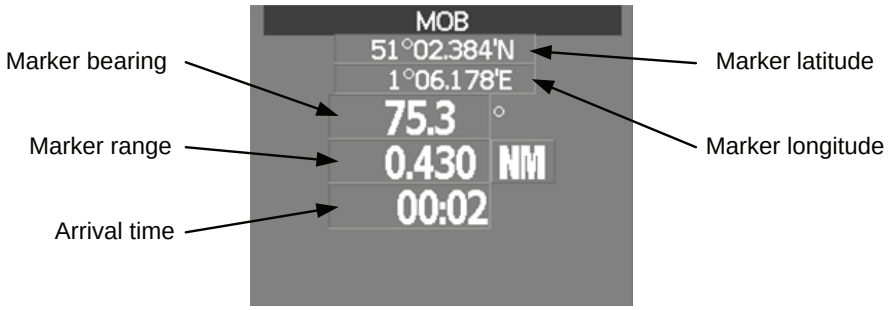

Menu

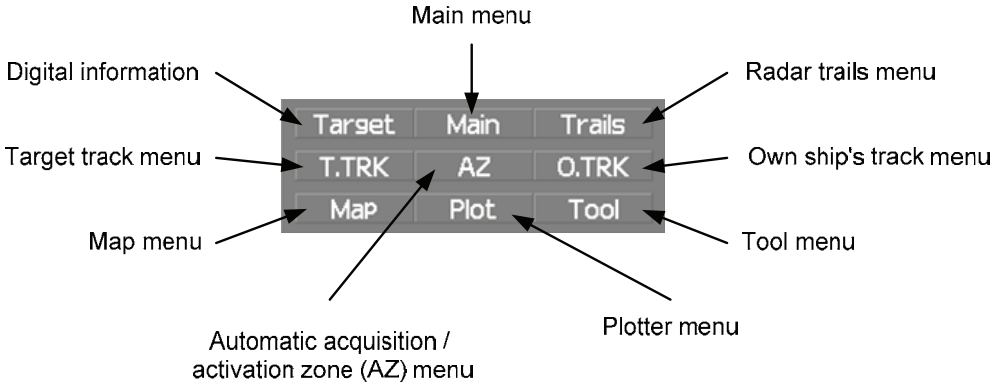

Brilliance

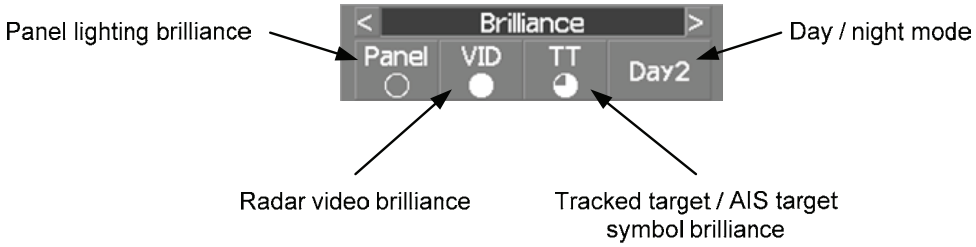

Display information

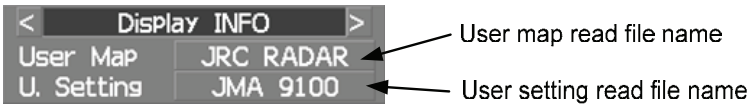

Alarm

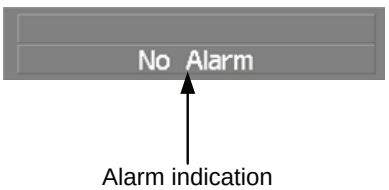

2.2 NAMES AND FUNCTIONS OF CONTROL PANEL KEYS

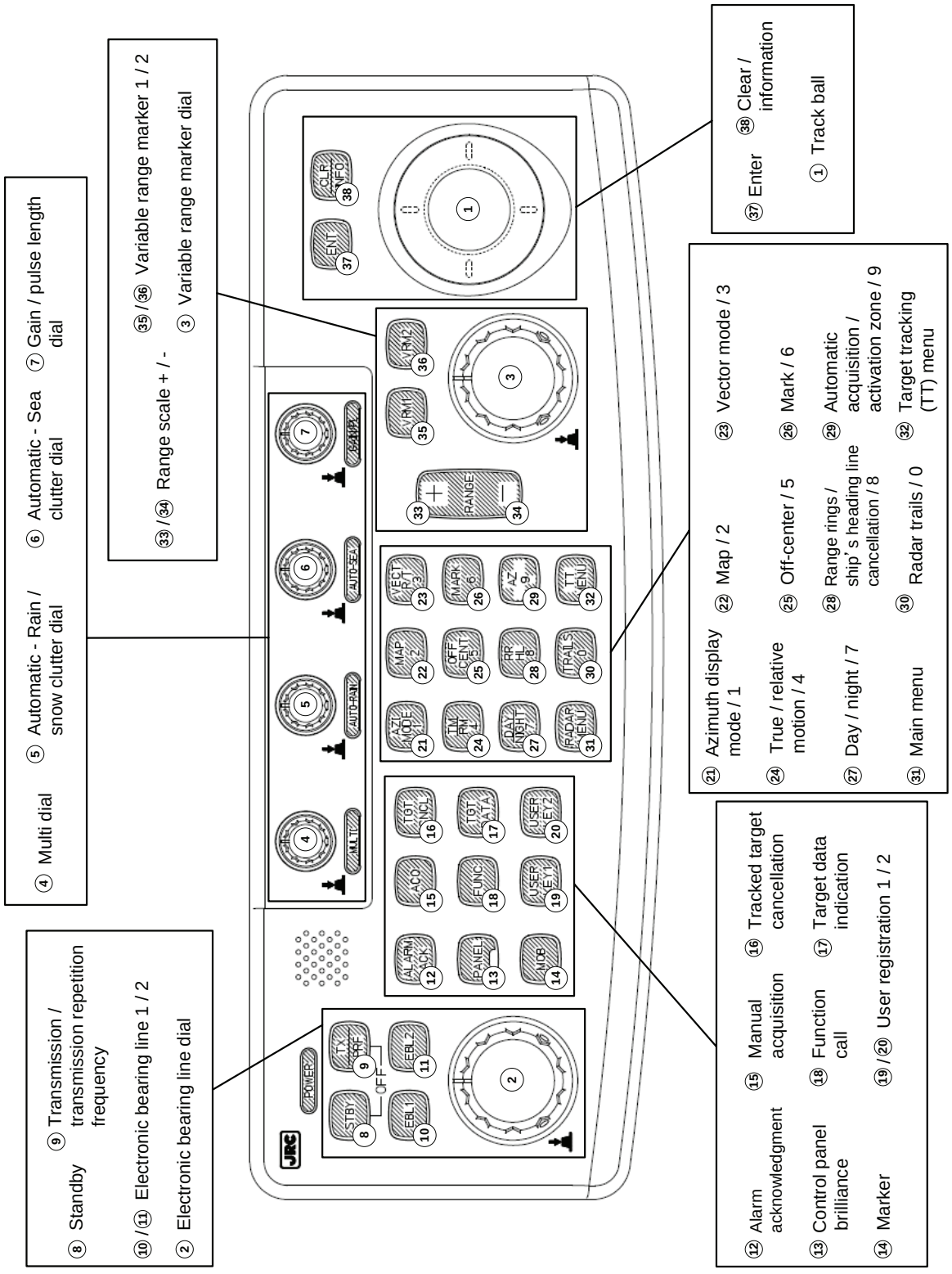

The name of each button is described from the following page. See below.

① Track ball

Use the track ball to move the cursor mark to any position.
For example, use it for setting in each mode and specifying a floating EBL center position and off-center position.

② [EBL] (Electronic Bearing Line) dial

Turn the dial to rotate the bearing of the EBL.
By pressing the dial, the selected EBL can be switched.
[ ] (Center fixing) ⇒ [C] (Floating) ⇒ [D] (latitude / longitude fixing) ⇒ [ ]
* [D] is enabled only when the navigator is connected.

③ [VRM] (Variable Range Marker) dial

Turn the dial to change the VRM range.
Press the dial to set the display of parallel index line (PI) to On / Off and open the PI Menu.

④ [MULTI] dial

Press the dial to switch the function that is registered in the multi-dial.
[Vector] ⇒ [Trails] ⇒ [TGT No.] ⇒ [Course] ⇒ [Track] ⇒ [Mark]
⇒ [Tune] ⇒ [Vector]
The function that is switched is displayed in multi-dial mode (lower left of the display on page 2-3)
If the dial is pressed for 2 seconds, the Multi Dial Setting menu is opened. If the dial is pressed again for 2 seconds, the setting menu is closed.

⑤ [AUTO-RAIN] (Automatic - Rain / Snow clutter suppression) dial

Turn the dial to suppress images by rain / snow clutter.
Turn the dial clockwise to increase the effect of suppression.
Press the dial to switch the mode to manual / automatic.

⑥ [AUTO-SEA] (Automatic - Sea clutter suppression) dial

Turn the dial to suppress images by sea clutter.
Turn the dial clockwise to increase the effect of suppression.
Press the dial to switch the mode to manual / automatic.

⑦ [GAIN / PL] (Gain / Pulse Length) dial

Turn the dial to adjust the reception gain of the radar.
Turn the dial clockwise to increase the gain.
Press the dial to switch the transmitting pulse length.

⑧ [STBY] (Standby) key

Use this key to turn on the power of the equipment.
Use this key also to switch the equipment from a transmitting state to a standby state.
The power can be turned off by pressing the **[STBY]** key and **[TX / PRF]** key concurrently while the power is On.

⑨ [TX / PRF] (Transmission / transmission repetition frequency) key

At expiration of the pre-heat time after the power is turned on, [Preheat] of the transmission / standby indication (Upper left of the display on page 2-2) changes to [Standby].
If this key is pressed subsequently, transmission starts.
If this key is pressed during transmission, fine adjustments of the transmission repetition frequency are enabled.
By using the fine adjustments of the transmission repetition frequency and the interference removal function, the interference suppression effect can be improved.

⑩ / ⑪ [EBL1] / [EBL2] (Electronic Bearing Line 1 / 2) key

Use these keys to switch EBL1 / EBL2 to On / Off.
If the key is pressed for 2 seconds, the EBL / Cursor Setting menu is opened.

⑫ [ALARM ACK] (Alarm acknowledgment) key

Use this key to acknowledge the alarm such as a failure alarm and a collision alarm.
To stop the alarm, press this key while the alarm sound is emitted.
If multiple alarms occur, press this key same time as the alarms.

⑬ [PANEL] (Control panel brilliance) key

Use this key to adjust the brilliance of various keys and dials on the control panel.

⑭ [MOB] (Marker) key

A marker is set on the own ship's position latitude / longitude at that time. Use this key to store the own ship's position at the time in such a case that someone falls overboard from the ship.
The marker can be cleared by pressing the key for 2 seconds.

⑮ [ACQ] (Manual acquisition) key

Use this key to acquire a target of the cursor position manually.

⑯ [TGT CNCL] (Tracked target cancellation) key

Use this key to cancel the tracked target symbol / vector at the cursor position and stop tracking.
When this key is pressed for 2 seconds, all the tracked target symbols / vectors are cancelled and tracking is stopped.

⑰ [TGT DATA] (Target data indication) key

Use this key to check the digital information of the AIS target or the tracked target.

⑱ [FUNC] (Function call) key

Use this key to switch the original signal processing settings.
[FUNC Off] ⇒ [Coast] ⇒ [Deep Sea] ⇒ [Fishnet] ⇒ [Storm] ⇒ [FUNC Off]
If the key is pressed for 2 seconds, the User Function Setting menu is displayed.

⑲ / ⑳ [USER KEY 1 / 2] (User registration 1 / 2) key

Use this key to perform pre-registered operations.
If this key is pressed for 2 seconds while no operation is registered, the User Key Setting menu is opened.

㉑ [AZI MODE / 1] (Azimuth display mode / 1) key

Switch the azimuth display.
[H Up] (Head Up) ⇒ [N Up] (North Up) ⇒ [C Up] (Course Up) ⇒ [N Up]
During the menu operation, the key functions as a numeric key **[1]**.
If this key is pressed for 2 seconds, GYRO setting menu is opened.

㉒ [MAP / 2] key

Use this key to switch the map display to On / Off such as marine chart, coastline, and depth contour.
During the menu operation, the key functions as a numeric key **[2]**.
If this key is pressed for 2 seconds, the Map Setting menu is opened.

㉓ [VECT R / T / 3] (Vector mode / 3)

Use this key to switch vector indication [T] (true vector) / [R] (relative vector).
During the menu operation, the key functions as a numeric key **[3]**.

㉔ [TM / RM / 4] (True Motion / Relative Motion / 4) key

Use this key to switch the motion mode between [TM] (true motion) and [RM] (relative motion).
If the key is pressed for 2 seconds in [TM], the own ship's position is reset.
During the menu operation, the key functions as a numeric key **[4]**.

㉕ [OFF CENT / 5] (Off-center / 5) key

By pressing this key, moving the cursor, and pressing the **[ENT]** key, the ship's position can be moved to the cursor position. The moving range is about 66% of the radius.
If the key is pressed for 2 seconds, the off-center is set to Off and the ship's position is returned to the center of the screen.
During the menu operation, the key functions as a numeric key **[5]**.

㉖ [MARK / 6] (Mark / 6) key

Use this key to display a mark in any screen position. This key can also be used for clearing the mark that is currently displayed.
If the key is pressed for 2 seconds, the Mark Setting menu is opened.
During the menu operation, the key functions as a numeric key **[6]**.

㉗ [DAY / NIGHT / 7] (Day / night mode / 7) key

Use this key to switch the color and brightness of the screen that have been set in advance.
If the key is pressed for 2 seconds, the Display Color Setting menu is opened.
During the menu operation, the key functions as a numeric key **[7]**.

㉘ [RR / HL / 8] (Range Rings / ship's heading line off / 8) key

Use this key to set the range rings marker to On / Off.
If the key is pressed for 2 seconds, the ship's heading line is cleared while the key is pressed.
During the menu operation, the key functions as a numeric key **[8]**.

㉙ [AZ / 9] (Automatic Acquisition / Activation Zone / 9) key

Use this key to set automatic acquisition / activation zone.
If the key is pressed for 2 seconds, the AZ Menu (automatic acquisition / activation zone menu) is opened.
During the menu operation, the key functions as a numeric key **[9]**.

㉚ [TRAILS / 0] (Radar trails / 0) key

Use this key to switch the length of the radar trail period.
If the key is pressed for 2 seconds, the RADAR Trails setting menu is opened.
If this key is pressed for 5 seconds, the radar trail is cleared.
During the menu operation, the key functions as a numeric key **[0]**.

㉛ [RADAR Menu] (Main menu) key

Use this key to open the Main Menu.

㉜ [TT Menu] key

Use this key to open the TT Menu (target tracking menu).

㉝ / ㉞ [RANGE + / -] key

Press the **[+]** key to increase the observation range and the **[-]** key to reduce the observation range.

㉟ /㊱ [VRM 1 / 2] (Variable Range Marker 1 / 2) key

Use this key to set the display of VRM1 / VRM2 to On / Off and acquire the operation right.

㊲ [ENT] (Enter) key

Use this key to confirm menu selection and input of numeric values.
This key is equivalent to the clicking of the left button of the track ball.

㊳ [CLR / INFO] (Clear / information) key

Use this key to cancel menu selection or numeric value input.
This key is equivalent to the clicking of the right button of the track ball.

2.3 FUNCTIONS OF SOFTWARE BUTTONS

In this radar, the frequently used functions can be directly set from the screen without opening the menu by using the software buttons on the screen for quick handling. The screen is divided into a number of areas and each area is named.

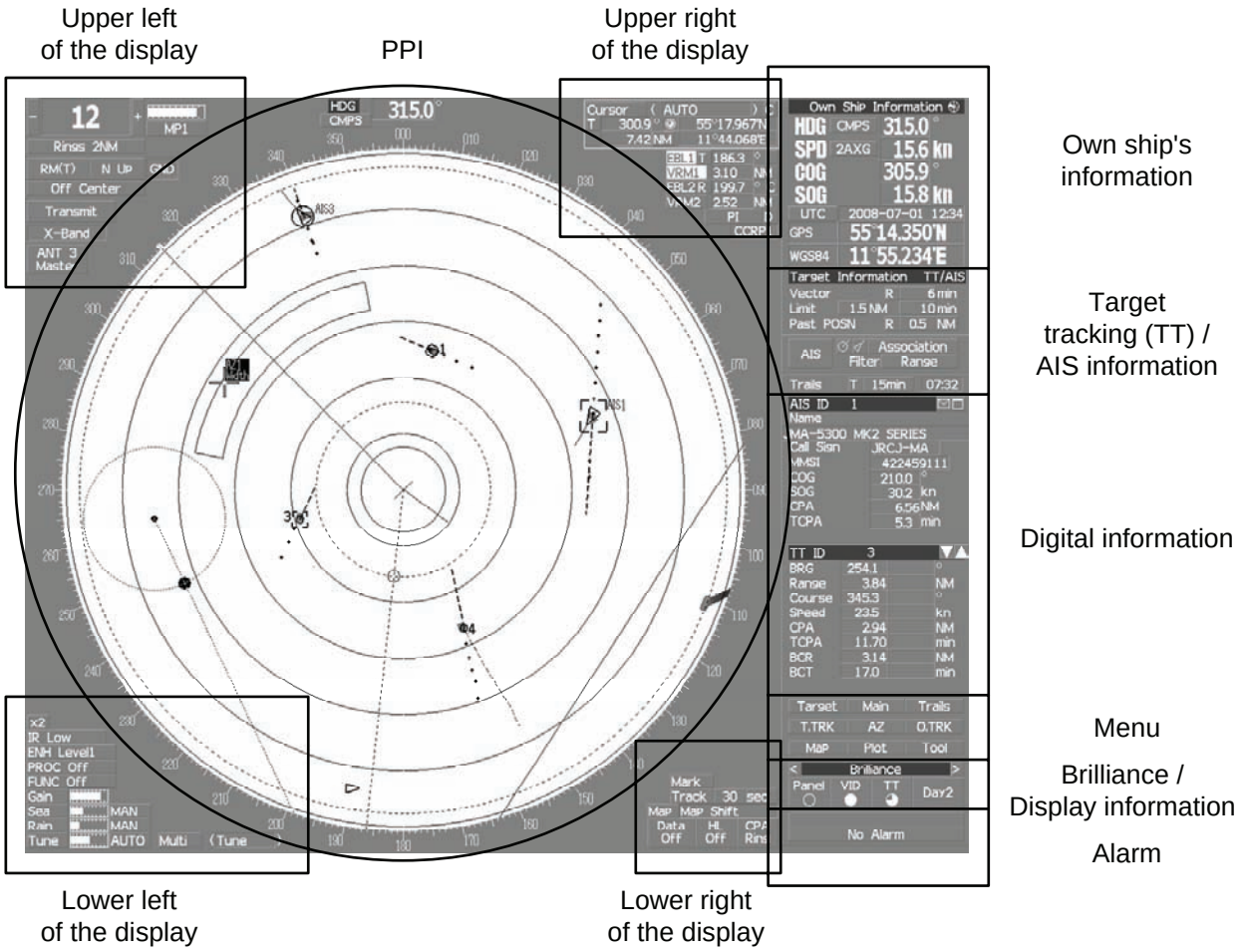

The name of each button is described from the next page. The function can be used by pressing (clicking) the **[ENT]** key while setting the arrow cursor on the button position.

PPI

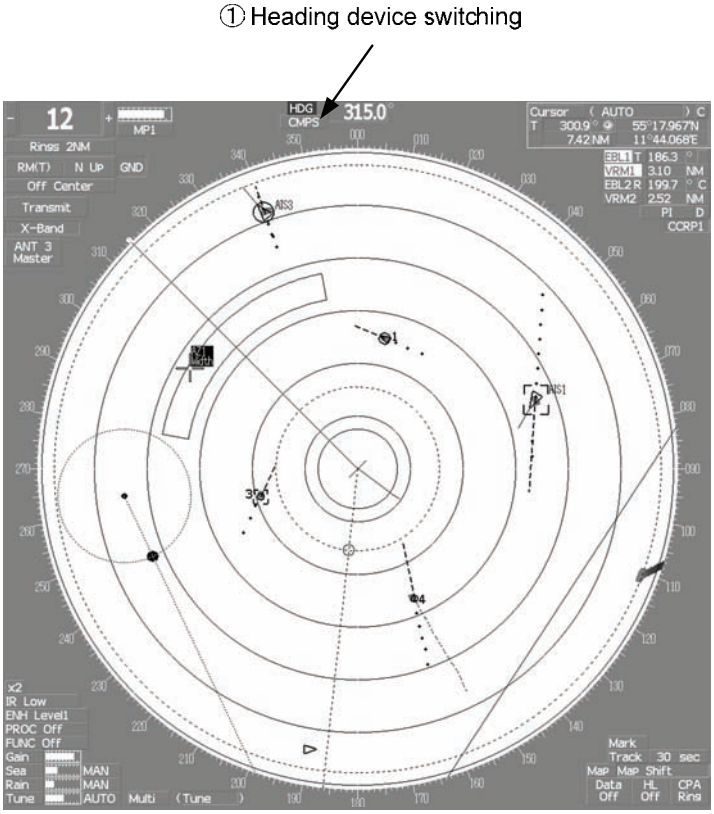

① : Heading device switching

This function switches the heading device.

GYRO (GYRO) ⇒ CMPS (Electronic compass) ⇒ G.COM (GPS compass) ⇒ GYRO

If the selected heading device is not connected to the equipment, an alarm is issued.

Upper left of the display

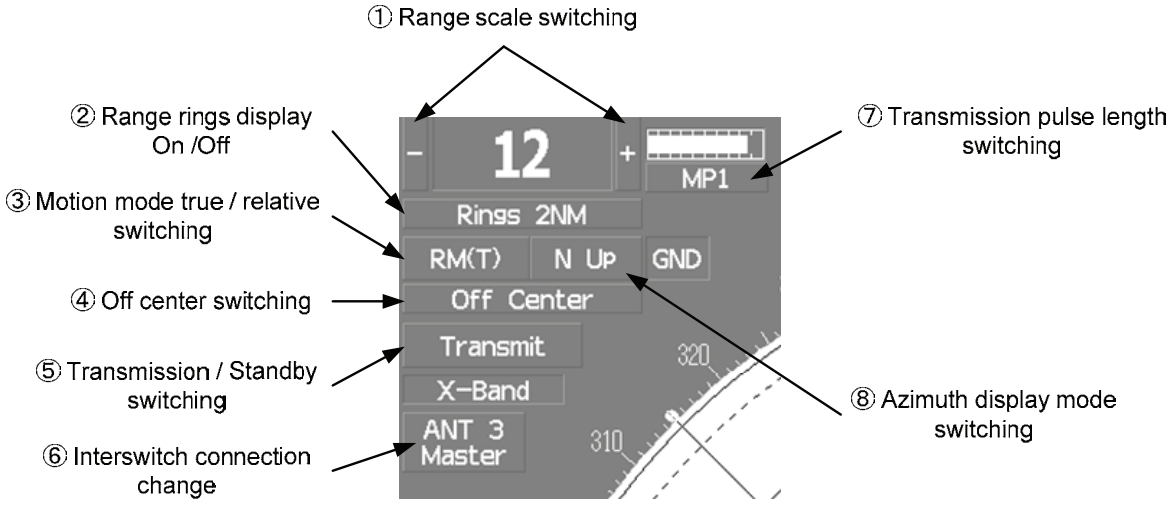

① : Range scale switching

To increase the observation range scale (maximum 96NM), click [+] and to reduce the range (minimum 0.125NM), click [-].

② : Range rings display On / Off

The display of range rings are set to On / Off whenever this button is clicked.
When the display is set to On, the interval of the fixed range marker is displayed.

③ : Motion mode true / relative switching

The screen motion mode is switched whenever the button is clicked.
[TM] (true motion) ⇒ [RM] (relative motion) ⇒ [TM]
[RM(R)] indicates that the radar trails is a relative trail.
[RM(T)] indicates that the radar trails is a true trail.

④ : Off center switching

If this button is clicked, the cursor is moved, and the **[ENT]** key is pressed, the ship's position can be moved to the cursor position. The moving range is within 66% of the radius.
If the button is clicked for 2 seconds, the off-center is set to Off and the ship's position is returned to the center of the screen.

⑤ : Transmission / standby switching

At expiration of the pre-heat time after the power is turned on, [Preheat] changes to [Standby].
[Standby] : Indicates a standby state. If this button is clicked in this state, the equipment is set to a transmission state.
[Transmit] : Indicates a transmission state. If this button is clicked in this state, the equipment is set to a standby state.

⑥ : Interswitch connection change

This button is displayed when the interswitch is connected. This button indicates the connection status of the scanner unit that is connected to the indicator.
If the button is clicked in the transmission standby state, the menu for changing the connection state between the scanner unit and the indicator is displayed. The connection state of the scanner unit and indicator cannot be changed unless the master indicator is in a standby state.
→Refer to the Interswitch (Optional) Instruction Manual that is attached for the setting method.
This button is not displayed if the interswitch is not connected.

⑦ : Transmission pulse length switching

The transmission pulse length is switched whenever this button is clicked. Three types of pulses are available, short pulse (SP), middle pulse (MP), and long pulse (LP). The pulse length and repetition frequency vary even for the same short pulse, according to the range that is used and it is displayed as [SP1] , [SP2].

⑧ : Azimuth display mode switching

The azimuth display is switched whenever this button is clicked.
[H Up] (Head Up) ⇒ [N Up] (North Up) ⇒ [C Up] (Course Up) ⇒ [H Up]
If the button is clicked for 2 seconds, the GYTO Setting menu is displayed.

Lower left of the display

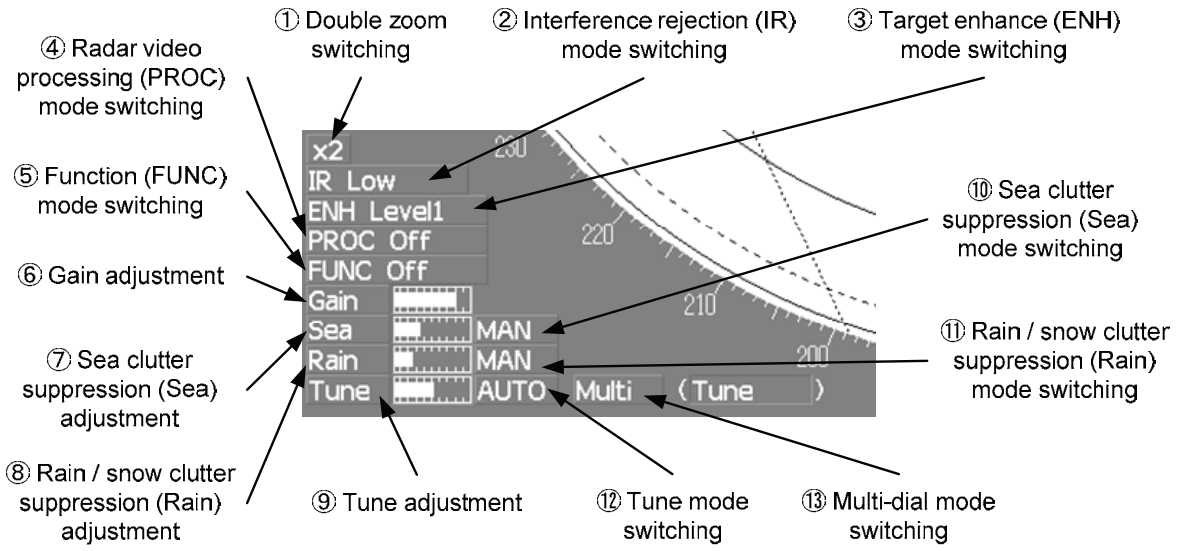

① : Double zoom switching

Use this function to enlarge to double the size the display screen of the position specified by the cursor. If this button is clicked, the zoom mode is set. When the cursor is moved to the radar screen and the **[ENT]** key is pressed, the screen is enlarged to double the size so that the middle of the cursor and the own ship's position is set to the center of the screen. This function cannot be used when the range is 0.125NM.

② : Interference rejection (IR) mode switching

The interference rejection mode is switched whenever this button is clicked.

IR Off ⇒ IR Low ⇒ IR Medium ⇒ IR High ⇒ IR Off

③ : Target enhance (ENH) mode switching

The target enhance mode is switched whenever this button is clicked.

ENH Off ⇒ ENH Level1 ⇒ ENH Level2 ⇒ ENH Level3 ⇒ ENH Off

④ : Radar video processing (PROC) mode switching

The radar video processing mode is switched whenever this button is clicked.

PROC Off ⇒ 3Scan CORREL ⇒ 4Scan CORREL ⇒ 5Scan CORREL ⇒
⇒ Remain ⇒ Peak Hold ⇒ PROC Off

⑤ : Function (FUNC) mode switching

The function mode is switched whenever this button is clicked.

FUNC Off ⇒ Coast ⇒ Deep Sea ⇒ Fishnet ⇒ Storm ⇒ FUNC Off

If the button is clicked for 2 seconds, the function registration menu (User Function Setting) is opened.

⑥, ⑦, ⑧, and ⑨ : Gain, Sea clutter suppression (Sea), Rain / snow clutter suppression (Rain), Tune adjustment

Adjust the gain, sea clutter suppression, rain and snow clutter suppression and tune using the track ball. If the button is clicked on, the adjustment value is shown at the upper-right of the cursor. Make adjustments by moving the track ball to the left and right. Determine the adjustment by pressing the **[ENT]** key.

⑩, ⑪, and ⑫ : Sea clutter suppression (Sea) mode, Rain / snow clutter suppression (Rain) mode, and Tune mode switching

Use these functions to switch to the manual or automatic mode of sea clutter suppression, rain / snow clutter suppression and tune. The bar on the left side indicates the position of the dial.

The mode is switched to [MAN] (manual) / [AUTO] (automatic) whenever the button is clicked.
If rain / snow clutter suppression is switched to an automatic mode, sea clutter suppression is switched to an automatic mode also.

⑬ : Multi-dial mode switching

The function that is registered in the multi-dial is switched whenever the button is clicked.

[Vector] ⇒ [Trails] ⇒ [TGT No.] ⇒ [Course] ⇒ [Track] ⇒ [Mark] ⇒
⇒ [Tune] ⇒ [Vector]

The switched function is displayed in ( ).
If the button is clicked for 2 seconds, the Multi Dial Setting menu is opened. If this button is clicked again for 2 seconds, this setting menu is closed.

Upper right of the display

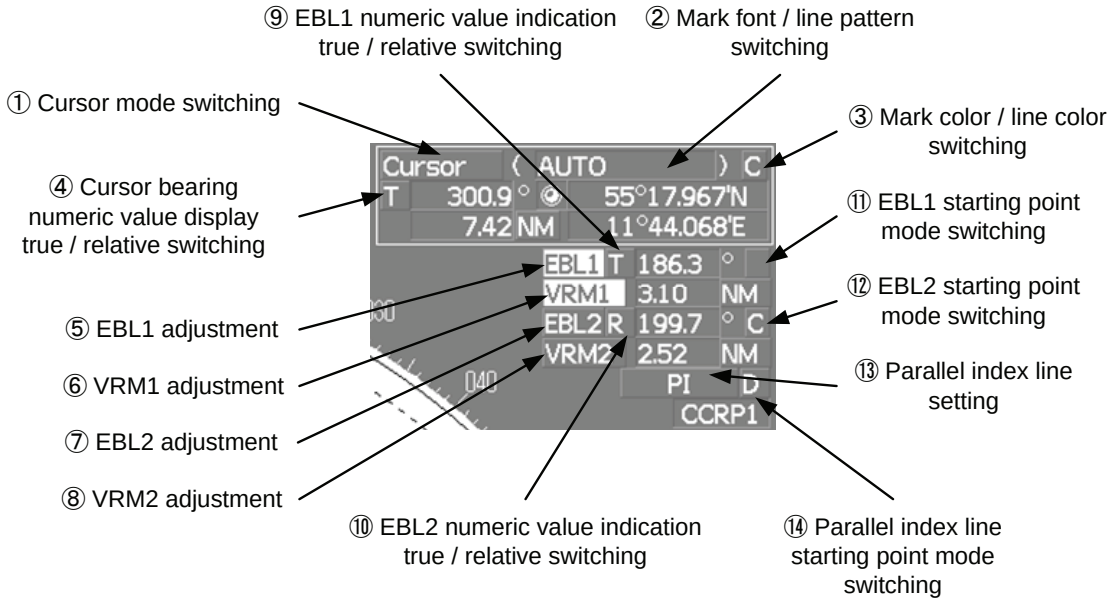

① : Cursor mode switching

The mode of the function that uses the cursor is switched whenever this button is pressed.

[AUTO] ⇒ [ACQ TT] ⇒ [ACT AIS] ⇒ [TGT DATA] ⇒ [CNCL TT] ⇒
⇒ [DEACT AIS] ⇒ [CNCL Data] ⇒ [□] (Mark) ⇒ [--------] (Line) ⇒
⇒ [Property] ⇒ [AUTO]

② : Mark font / line pattern switching

This function switches a mark font / line pattern. If this button is clicked while the cursor mode is □ (mark) or -------- (line), the mark font / line pattern is changed.

③ : Mark color / line color switching

This function switches a mark color / line color. If this button is clicked while the cursor mode is □ (mark) or -------- (line), the mark color / line color is changed.

④ : Cursor bearing numeric value display true / relative switching

The bearing numeric value display T (true bearing) / R (relative bearing) of the cursor is switched whenever this button is clicked.

⑤, ⑥, ⑦, and ⑧ : EBL1 / 2 and VRM1 / 2 adjustment

These functions set the EBL1, VRM1, EBL2, and VRM2 displays to On / Off and acquire the operation right.
If the button is clicked on, the operation right is acquired. Make adjustments by moving the track ball to the left and right Determine the adjustment by pressing the **[ENT]** key.

⑨ and ⑩ : EBL1, EBL2 numeric value true / relative switching

The EBL1 / 2 bearing numeric value display T (true bearing) / R (relative bearing) is switched whenever the button is clicked.
If the button is clicked for 2 seconds, the EBL / Cursor Setting menu is displayed.

⑪ and ⑫ : EBL1 / EBL2 starting point mode switching

The EBL starting point is set to CCRP or any position on the radar screen whenever this button is clicked.

⇒ C ⇒ D ⇒

: Center :The starting point is fixed to the CCRP position.

C : Screen Fix :The starting point is set to the cursor position. If the **[ENT]** key is pressed subsequently, the starting position is fixed to the cursor position.

D : L/L Fix :The starting point is set to the cursor position. If **[ENT]** key is pressed subsequently, the starting position is fixed to the latitude / longitude of the cursor.
(Connection of a navigator is necessary.)
If the starting point is moved outside of the screen, the operation is reset automatically and the starting point returns to the CCRP position.

* D is enabled only when a navigator is connected.

⑬ : Parallel index line setting

This function sets the parallel index line display to On / Off and acquires the operation right.
If this button is clicked, the operation right is acquired and the menu is opened. After setting, determine the setting by pressing the **[ENT]** key.

⑭ : Parallel index line starting point mode switching

The parallel index line starting point is set to CCRP or any position on the radar screen whenever this button is clicked.
In the same way as for the EBL starting point, three options are available, : Center, C : Screen Fix, and D : L/L Fix.

Lower right of the display

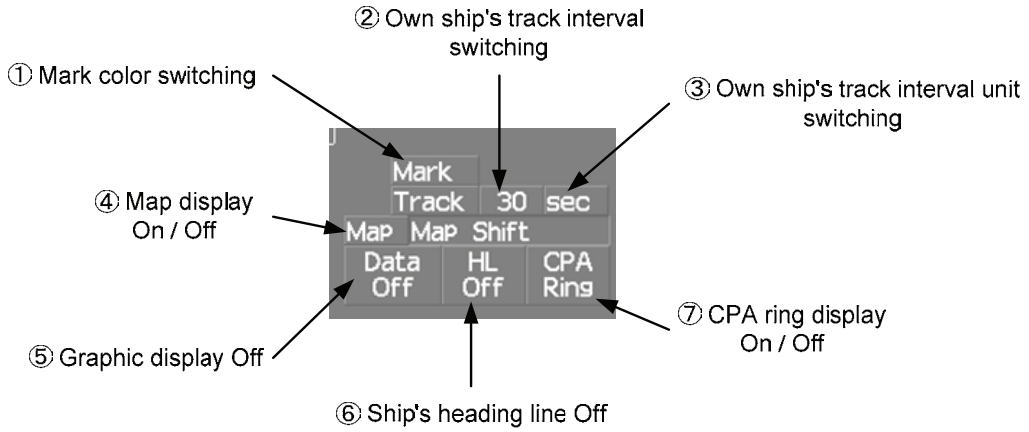

① : Mark color switching

The color of the mark is switched whenever this button is clicked.
If the button is clicked for 2 seconds, the Mark Setting menu is opened.

② : Own ship's track interval switching

The own ship's track interval is switched whenever this button is clicked.

③ : Own ship's track interval unit switching

The unit of the own ship's track interval is switched whenever this button is clicked.
[sec] ⇒ [min] ⇒ [NM] ⇒ [sec]

④ : Map display On / Off

The map display is set to On / Off whenever this button is clicked.
Map information must be inserted in the card slot of the radar process unit in advance.
If the button is clicked for 2 seconds, the Map Setting menu is opened.

⑤ : Graphic display Off

While the button is clicked, the graphic display other than VRM, EBL, HL, a cursor, and range rings on the radar screen is cleared temporarily.

⑥ : Ship's heading line Off

The ship's heading line (HL) display is set to Off while this button is clicked.
Since the ship's heading line is cleared while the button is clicked, the target in the ship's heading bearing can be clearly seen.

⑦ : CPA ring display On / Off

The CPA ring display is switched to On / Off whenever the button is clicked.
When the target vector display mode is [T] (true vector), the CPA ring cannot be set to On.

Own ship's information

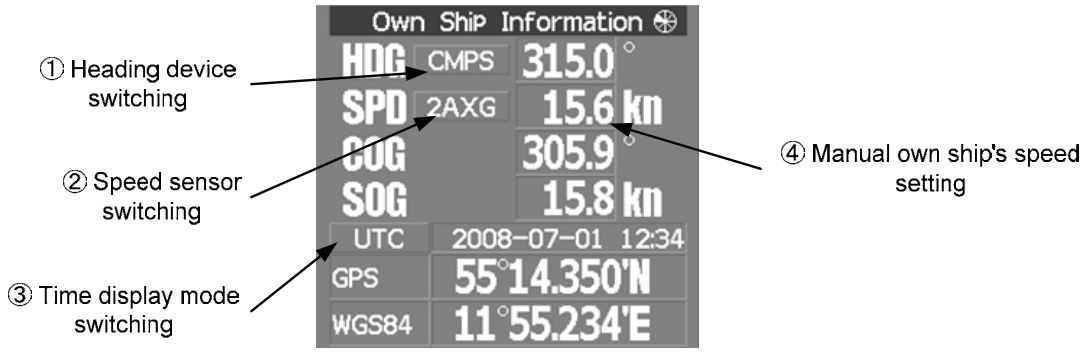

① : Heading device switching

The heading device is switched whenever this button is clicked.

GYRO ⇒ CMPS (Electronic compass) ⇒ GCOM (GPS compass) ⇒ GYRO

When the selected heading device is not connected to the equipment, an alarm is issued.

② : Speed sensor switching

The speed sensor is switched whenever the button is clicked.

MAN (Manual) ⇒ LOG (Single-axis water log) ⇒ 2AXW (Dual-axis water log) ⇒ 2AXG (Dual-axis ground log) ⇒ GPS ⇒ MAN

When the selected speed device is not connected to the equipment, an alarm is issued.

③ : Time display mode switching

The time display mode UTC (universal time clock) / LMT (local mean time) is switched whenever this button is clicked.

④ : Manual own ship's speed setting

When selection of the speed sensor is set to MAN, enter the own ship's speed manually.
If this button is clicked, the numeric value input screen is opened. After setting a value, determine the entry by clicking ENT.

Target tracking (TT) / AIS information

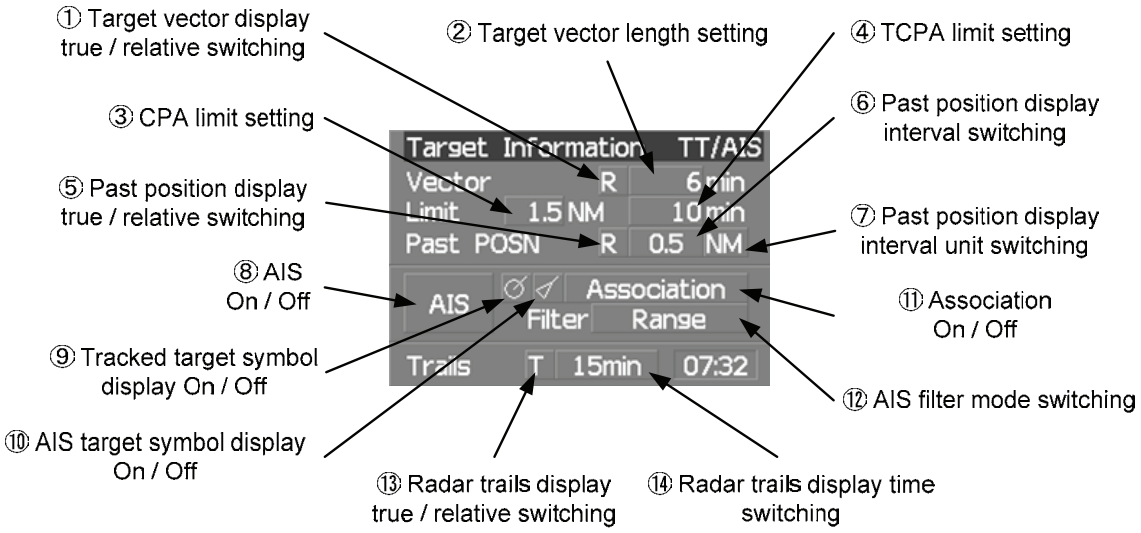

① : Target vector display true / relative switching

The tracked target / AIS target vector display is switched to [T] (true vector) / [R] (relative vector) whenever this button is clicked.
This setting is switched together with the past position display true / relative switching.

② : Target vector length setting

Set a vector length of the tracked target / AIS target.
If this button is clicked, the numeric value input screen is opened. After setting the length, determine the setting by clicking [ENT].

③ : CPA limit setting

Set a CPA limit.
If this button is clicked, the numeric value input screen is opened. After setting the limit, determine the setting by clicking [ENT].

④ : TCPA limit setting

Set a TCPA limit.
If this button is clicked, the numeric value input screen is opened. After setting the limit, determine the setting by clicking [ENT].

⑤ : Past position display true / relative switching

The tracked target / AIS target past position display is switched to [T] (true past position) / [R] (relative past position) whenever the button is clicked.
This setting is switched together with the target vector display true / relative switching.

⑥ : Past position display interval switching

The past position display interval is switched whenever the button is clicked.

⑦ : Past position display interval unit switching

The past position display interval unit is switched whenever the button is clicked.
[min] ⇒ [NM] ⇒ [min]

⑧ : AIS On / Off

The AIS display is switched to On / Off whenever the button is clicked.

⑨ : Tracked target symbol display On / Off

The tracked target symbol display is switched to On / Off whenever the button is clicked. Use this function to avoid confusion with the AIS symbol.

⑩ : AIS target symbol display On / Off

The AIS target symbol display is switched to On / Off whenever the button is clicked. Use this function to avoid confusion with the tracked target symbol.

⑪ : Association On / Off

The tracked target / AIS target association is switched to On / Off whenever the button is clicked.

⑫ : AIS filter mode switching

The AIS filter is switched whenever the button is clicked.

[Range] ⇒ [Sector] ⇒ [Zone] ⇒ [Range]

⑬ : Radar trails display true / relative switching

Radar trails are switched to [T] (true motion trail) / [R] (relative motion trail) whenever this button is clicked.
This setting is restricted by the radar display motion mode.
In relative motion display mode (RM), switching to [T] / [R] is possible.
In true motion display mode (TM), only [T] can be set.

⑭ : Radar trails display time switching

The radar trails display time is switched whenever the button is clicked.
If the time does not reach the radar trails time that was set, the remaining time is displayed on the right-hand side.
If the button is clicked for 2 seconds, the RADAR Trails Setting menu is opened.

Digital information: AIS target information

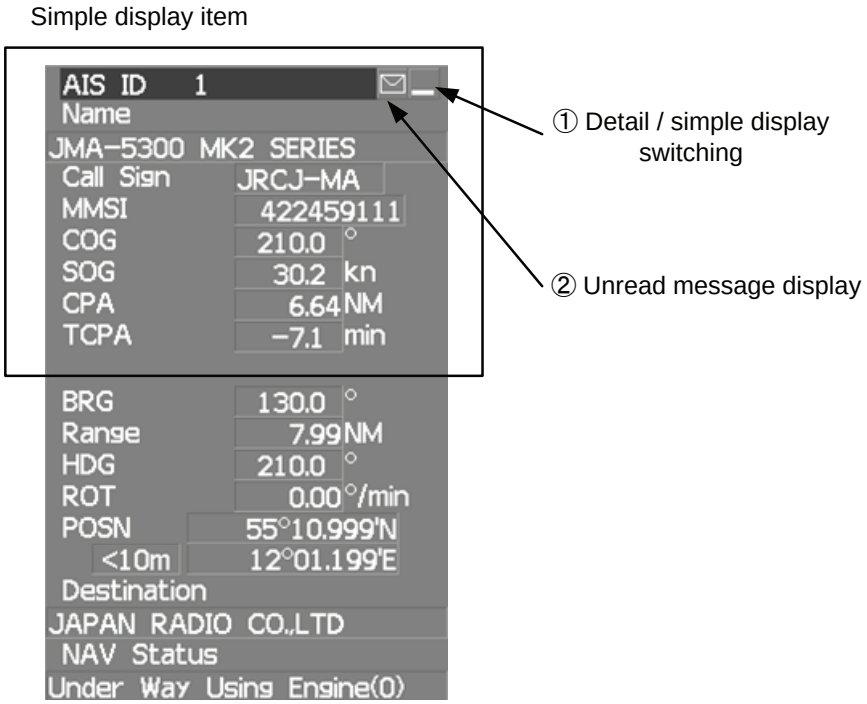

①：Detail / simple display switching

This function switches the display mode to detail / simple display when AIS target information is displayed.

②：Unread message display

When there is an unread message from the AIS target that is displayed, the message is displayed. If this button is clicked, the message is displayed.

Digital information: Tracked target information

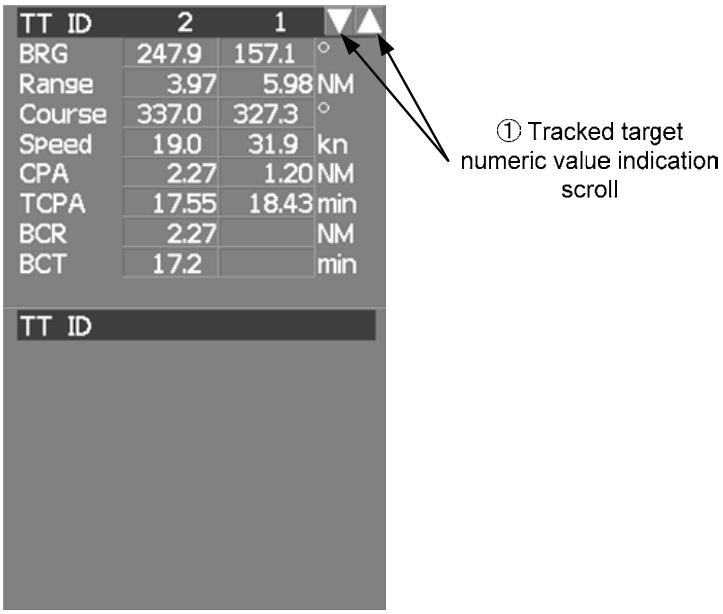

① : Tracked target numeric value indication scroll

This function scrolls the target numbers that are indicated in the tracked target information.

Digital information: Navigation information

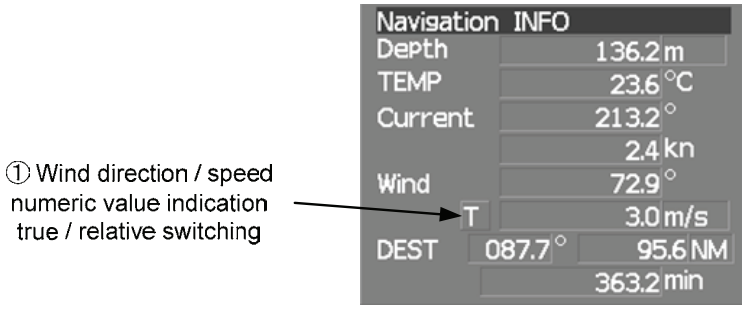

① : Wind direction / speed numeric value indication true / relative switching

The wind direction / speed numeric value indication is switched to [T] (true) / [R] (relative) whenever this button is clicked.

Digital information: Wind direction / speed

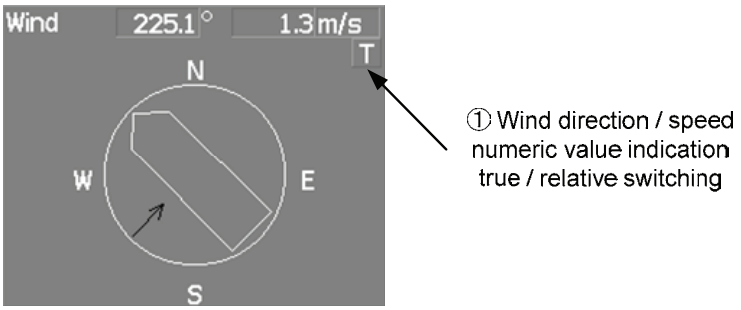

① : Wind direction / speed numeric value indication true / relative switching

The wind direction / speed numeric value indication is switched to T (true) / R (relative) whenever this button is clicked.

Menu

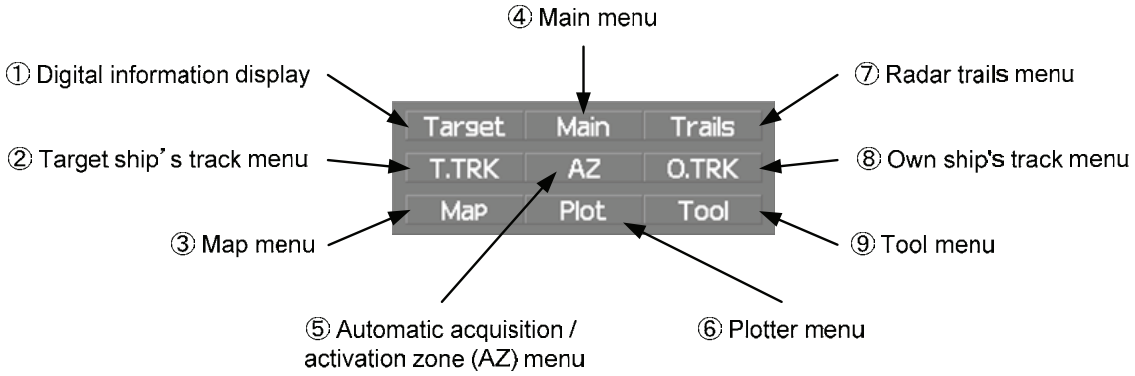

① : Digital information display

If this button is clicked while the menu screen is open, the menu is closed and control returns to the digital information display.
This function switches between the tracked target / AIS target display and navigation information or the course bar, and so on.

② : Target ship's track menu

If this button is clicked, the Target Track Setting menu is opened.

③ : Map menu

If the button is clicked, the Map Setting menu is opened.

④ : Main menu

If this button is clicked, the Main Menu is opened.

⑤ : Automatic acquisition / activation zone (AZ) menu

If this button is clicked, the AZ Menu is opened.

⑥ : Plotter menu

If this button is clicked, the Plot Menu is opened.

⑦ : Radar trails menu

If this button is clicked, the RADAR Trails Setting menu is opened.

⑧ : Own ship's track menu

If this button is clicked, the Own Track Menu is opened.

⑨ : Tool menu

If this button is clicked, the Tool Menu is opened.

Brilliance

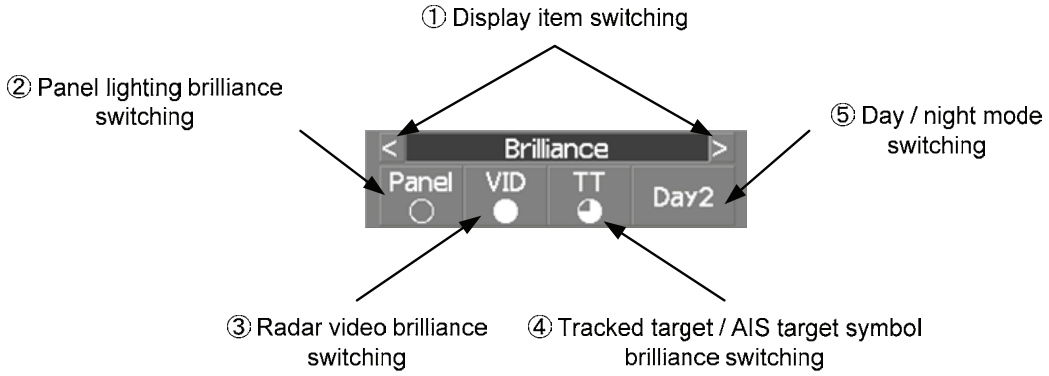

Display information

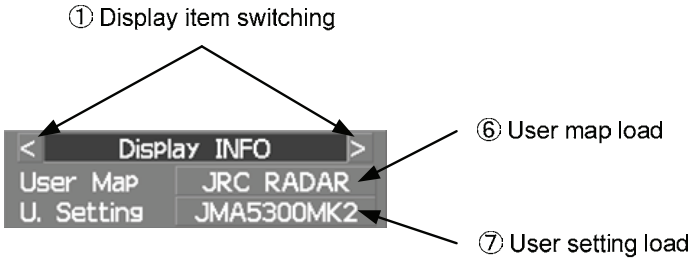

① : Display item switching

The brilliance adjustment screen and display information setting screen interchange whenever this button is clicked.

② : Panel lighting brilliance switching

This function enables the setting of the brilliance of the lighting of the control panel.
The brilliance changes whenever this button is clicked. Five levels of settings are available.

③ : Radar video brilliance switching

Adjust the brightness of the radar video (echo).
The brilliance changes whenever this button is clicked. Four levels of settings are available.

④ : Tracked target / AIS target symbol brilliance switching

Use this function to adjust the brilliance of the tracked target / AIS target symbol.
The brilliance changes whenever this button is clicked. Five levels of settings are available.

⑤ : Day / night mode switching

The day / night mode is switched whenever this button is clicked.

Day1 ⇒ Day2 ⇒ Day3 ⇒ Dusk ⇒ Night ⇒
⇒ Dusk ⇒ Day3 ⇒ Day2 ⇒ Day1

⑥ : User map load

If this button is clicked, the user created map read menu is opened.

⑦ : User setting load

If this button is clicked, the user setting read menu is opened.

Alarm

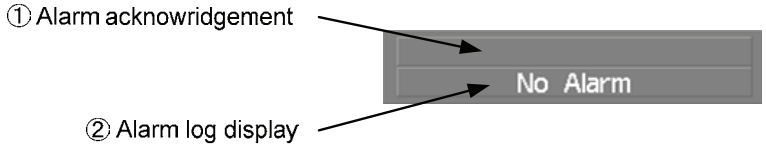

① : Alarm acknowledgment

If this button is clicked, the buzzer sound of the alarm that is currently issued is stopped and the alarm lamp stops blinking. If multiple alarms are issued, the next alarm to be acknowledged is displayed.
If the button is clicked, the alarm displayed on the top is acknowledged.
The alarms that are currently issued are displayed at the bottom one by one.

② : Alarm log display

If this button is clicked, the alarm log is displayed.