2) Install the Monitor Unit to the Display Unit Mount Kit with screws. Screws are attached to the Monitor Unit.
Screw: M5x14SUS + Spring washer + Washer (included in CWA-245/CWA-246/CWB-1594/CWB-1595)
Number of screw point: 26inch Monitor Unit(NWZ-208/NWZ-208-TP) - 10 points
19inch Monitor Unit(NWZ-207/NWZ-207-TP) - 6 points

⚠ Do not install in a position to close the vents of the monitor.

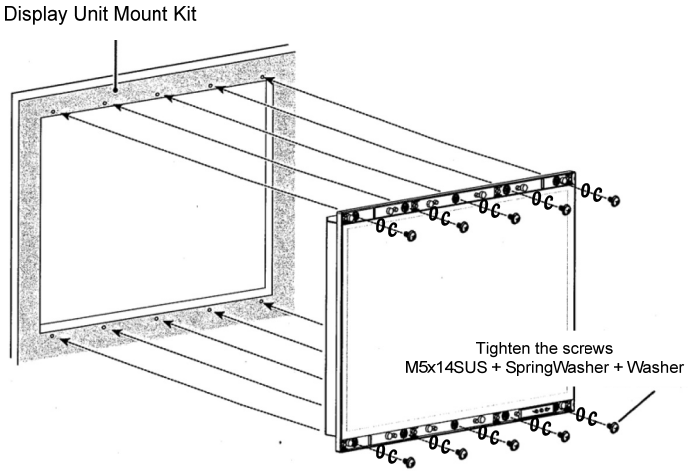

In case of the 26inch Monitor Unit

3) Remove the rear panel for wiring.

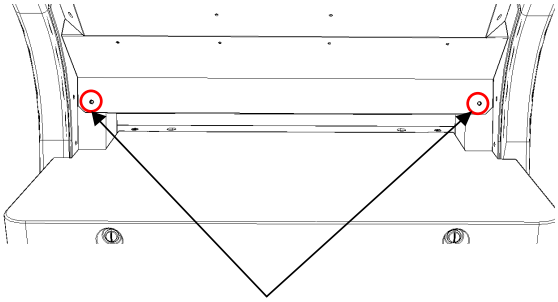

4) Insert the screw covers into the top and bottom spaces on the monitor.

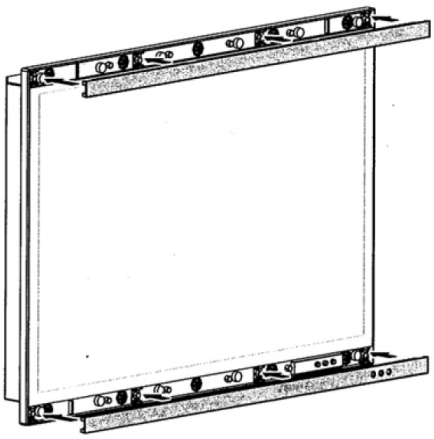

Monitor unit(26inch) NWZ-208/NWZ-208-TP

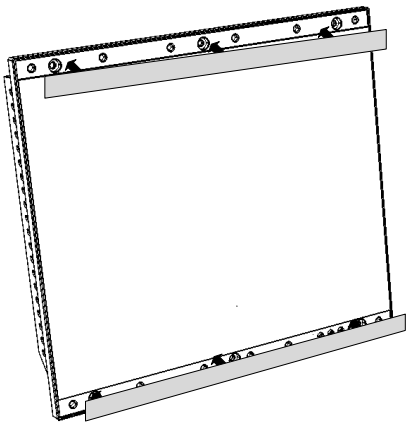

Monitor unit(19inch) NWZ-207/NWZ-207-TP

Installation of Monitor Unit ends above.

3.4.2 Installation of Operation Unit (NCE-5625/CWB-1593/NCE-5605)

3.4.2.1 **Installation of Keyboard Operation Unit (NCE-5625)**

1) Remove the 4 screw covers from the KOPU-Keyboard Operation Unit by pushing the inside of the cover.

⚠ Do not remove the cover using a flat blade screwdriver. Because there is a possibility that the cover is damaged.

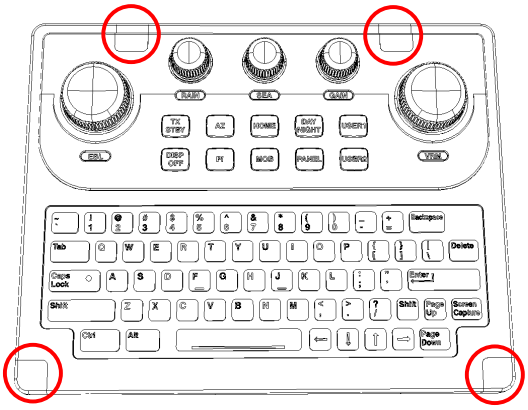

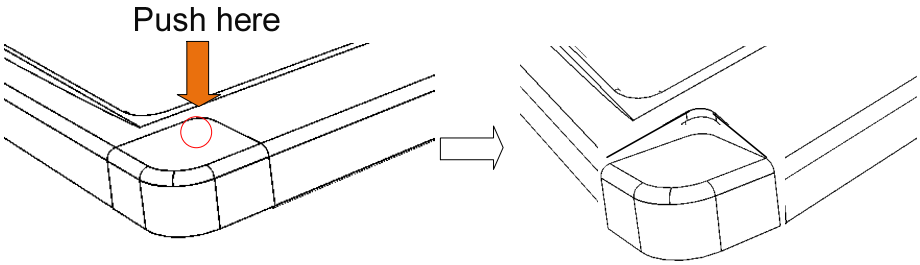

2) Insert the W64: H-7ZCNA4187cable (included in the CMD-1106 in the NCE-5625) to the J642 connecter.

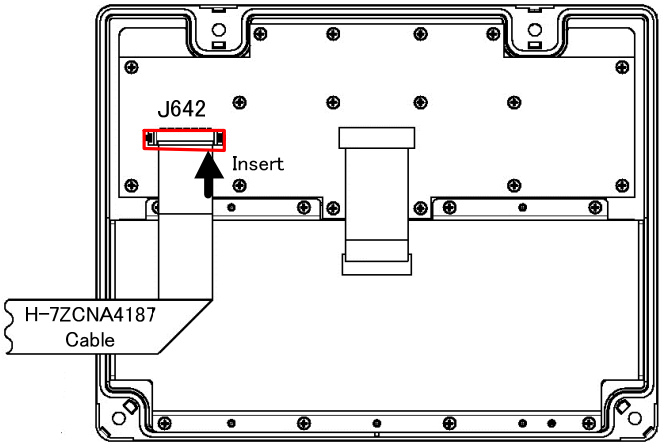

3) Install the KOPU to the Display Unit Mount Kit.

Screw: M5x14SUS + Spring washer + Washer (included in CWA-245/CWA-246/CWB-1596)

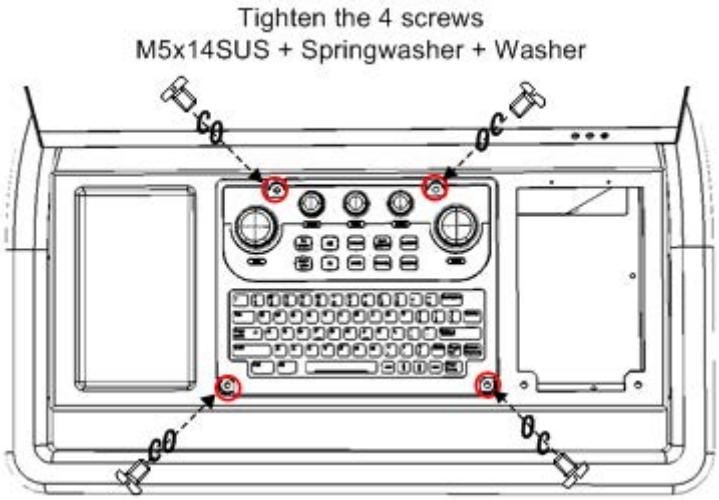

4) Insert the 4 screw covers into the original positions.

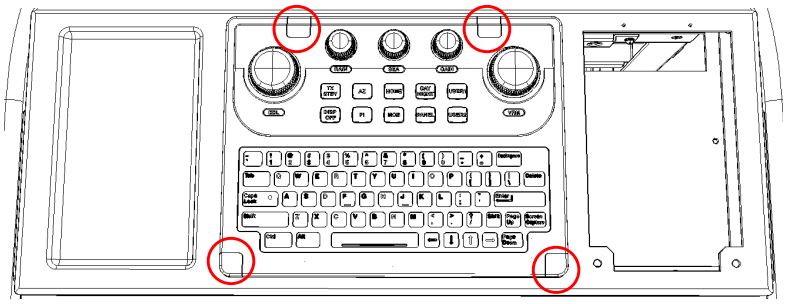

3.4.2.2 **Installation of Large Tray (CWB-1593)**

1) Remove the 4 screw covers from the Large Tray by pushing the inside of the cover.

⚠ Do not remove the cover using a flat blade screwdriver. Because there is a possibility that the cover is damaged.

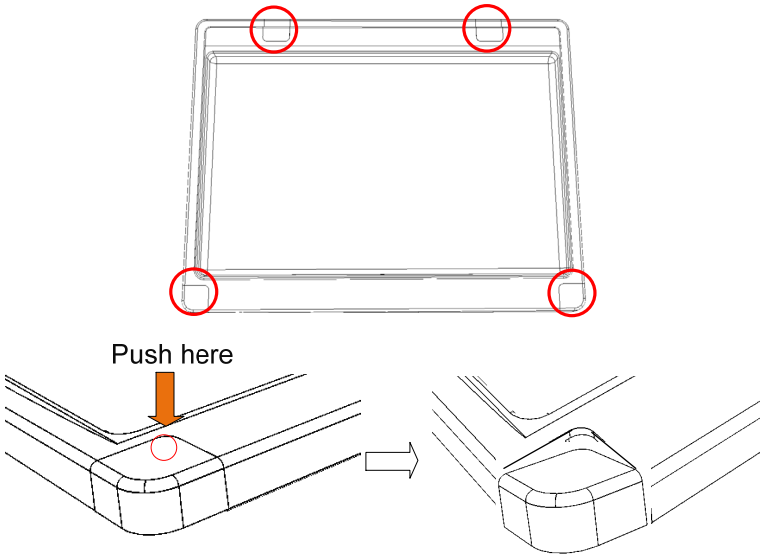

2) Install the Large Tray to the frame (CWA-245/CWA-246/CWB-1596).
Screw: M5x14SUS + Spring washer + Washer (included in CWA-245/CWA-246/CWB-1596)

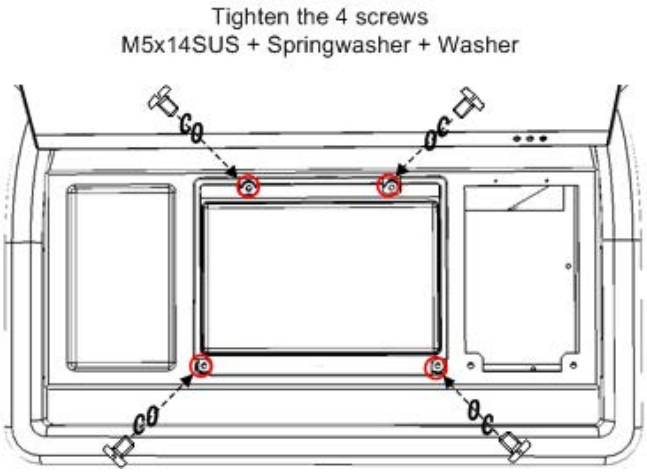

3) Insert the 4 screw covers into the original positions.

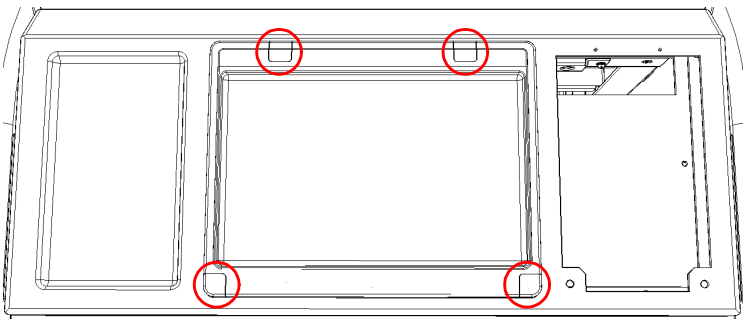

3.4.2.3 **Installation of Trackball Operation Unit (NCE-5605)**

1) Connect the W61: H-7ZCNA4151(included in CML-901) with the TOPU-Trackball Operation Unit. After connecting, guide the cable in the groove.

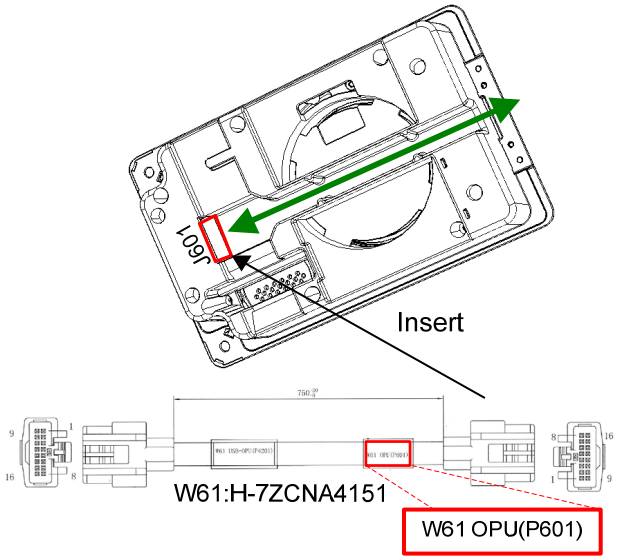

2) Remove the 2 screw covers from the TOPU.

⚠ Remove the screw covers by pushing the inside of the cover.

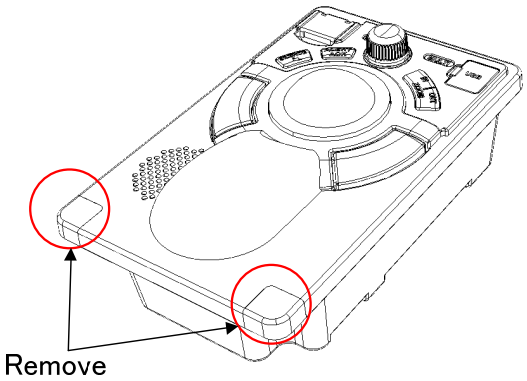

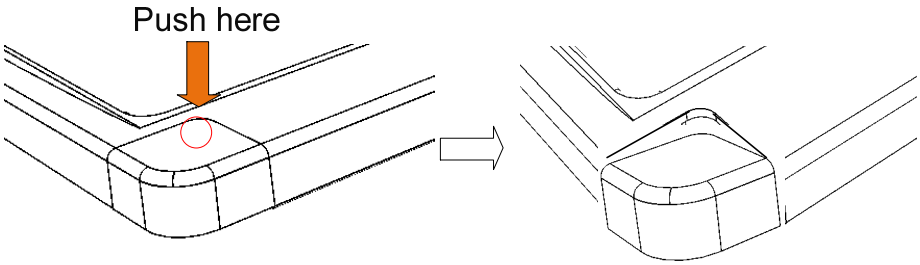

3) Install the TOPU bracket (MTV305174 included in TOPU) to the frame (CWA-245/CWA-246/CWB-1596).
Screw: NC3x8BS (included in CWA-245/CWA-246/CWB-1596)

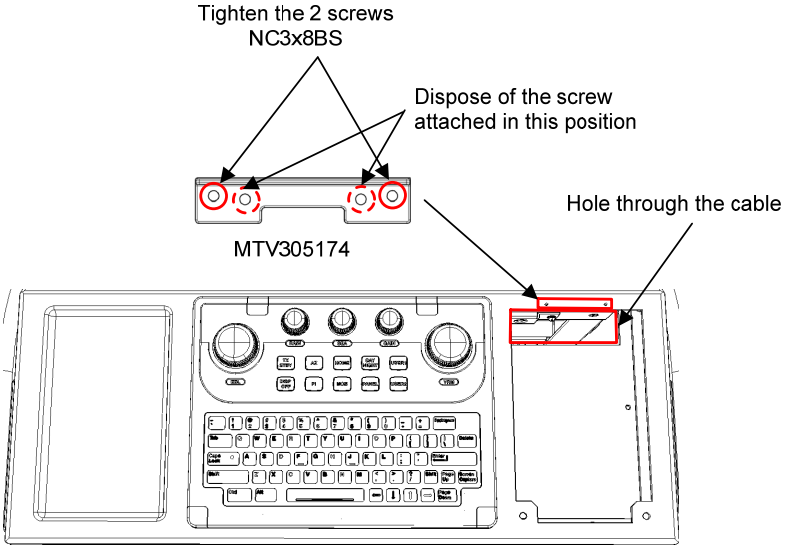

4) In case of installation of Keyboard Operation Unit.
Connect the W64: H-7ZCNA4187 cable (connected with Chapter 3.4.2.1 Installation of Keyboard Operation Unit) to J614 connector on TOPU.

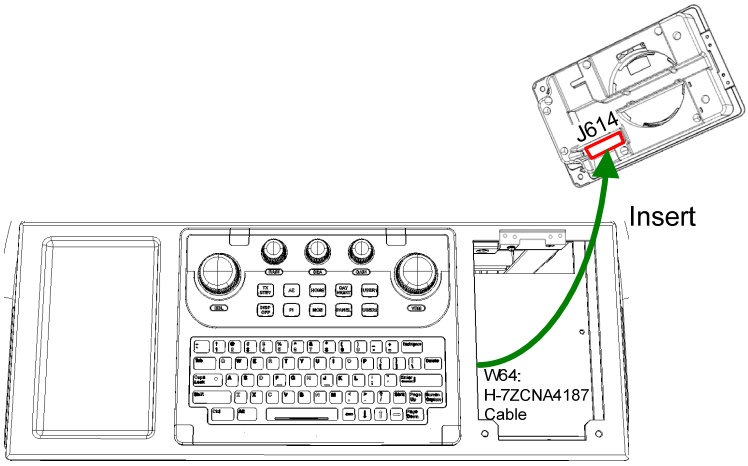

5) Insert the TOPU as shown in the figure below. And Install the TOPU to the Frame.
The W61: H-7ZCNA4151 cable through the hole in the bottom of the frame.

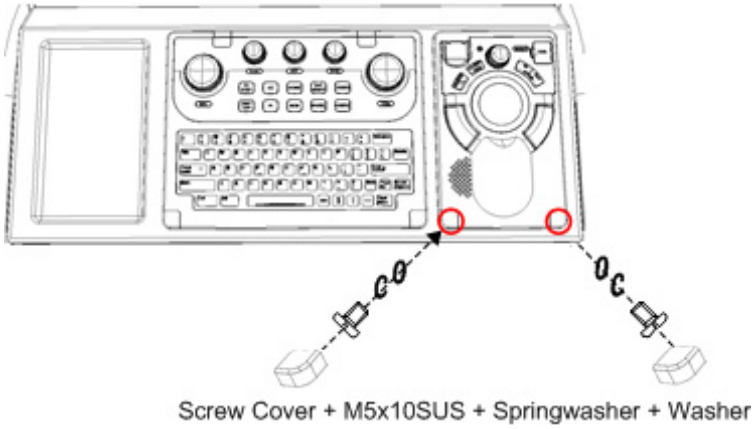

3.4.3 Installation of Central Control Unit (NDC-1590)

1) Remove the 4 screws of the front cover.

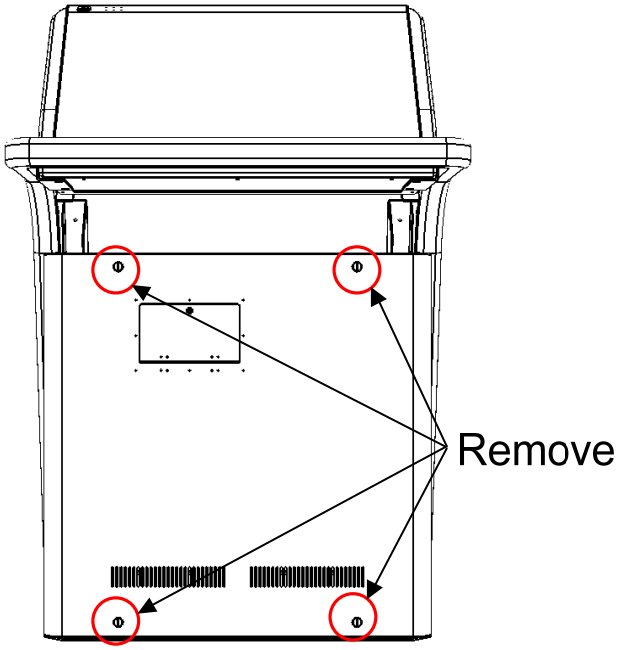

2) Remove the 2 screws that hold the upper shelf, and remove the shelf.
And then draw out forward and take out the upper shelf.

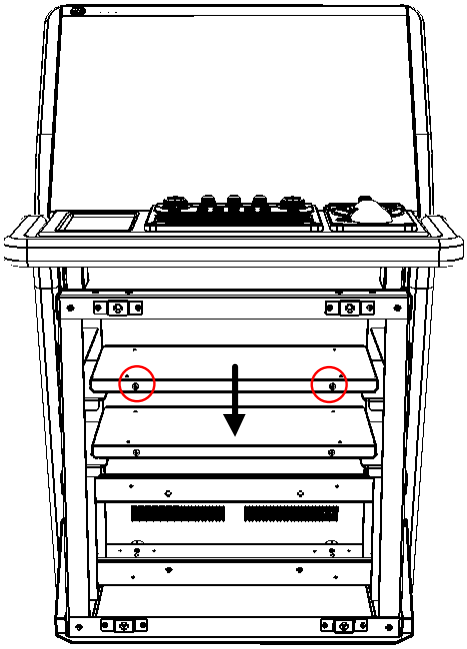

3) Install the CCU to the shelf. Refer to the figure below.

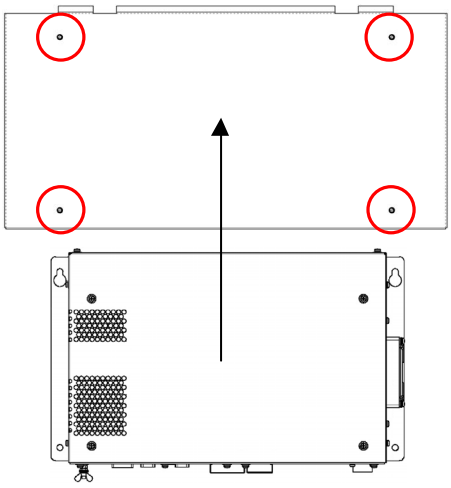

Tighten the 4 screws
M5x10SUS + Springwasher + Washer

4) Insert the shelf installed CCU. And screw the shelf to the frame.

⚠ Make sure the shelf is not floating.

Tighten the 2 screws
M5x10SUS + Springwasher + Washer

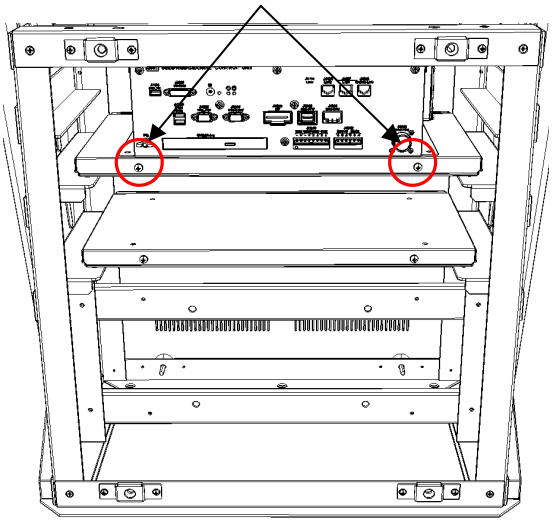

3.4.4 Installation of Power Supply Unit (NBD-913)

1) Remove the 2 screws that hold the lower shelf, and remove the shelf.
   And then draw out forward and take out the lower shelf.

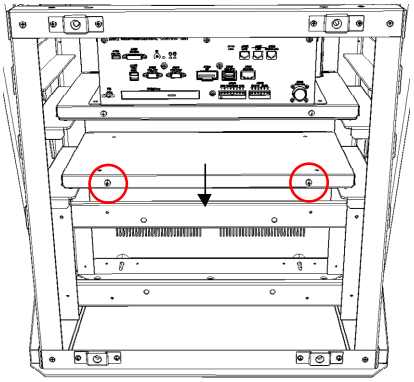

2) Install the PSU-Power Supply Unit to the shelf. Refer to the figure below.

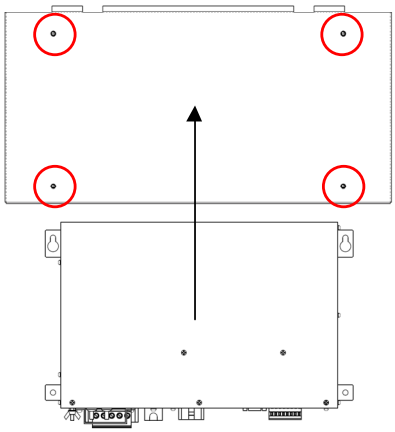

Screw
M5x10SUS+Springwasher+Washer

3) Insert the shelf installed PSU. And screw the shelf to the Frame.

⚠ Make sure the shelf is not floating.

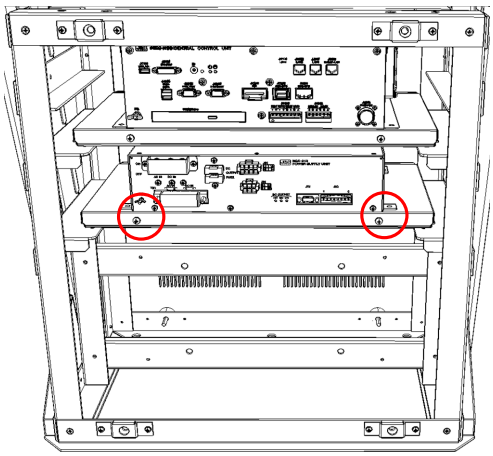

Tighten the 2 screws
M5x10SUS + Springwasher + Washer

3.4.5 Installation of Relay Terminal (CQD-2312)

Attach the CQD-2312 Relay Terminal for distribute the AC/DC power.

When the NQA-2443 Sensor LAN SW or UPS, has been arranged, install the SENSOR LAN SW and UPS before installing the Relay Terminal. For install the Relay Terminal, refer to the following procedure.

-3.5.3 Installation of Sensor LAN Unit

-3.5.4 Installation of UPS

1) Remove the 2 screws fixed to Display Unit Mount Kit(CWA-245/246). Refer to figure below for screw position.

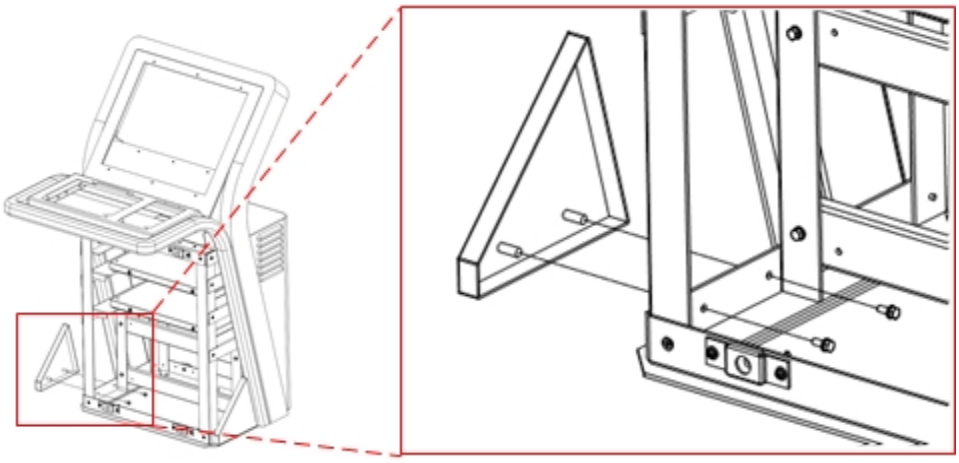

2) Fix the bracket for relay terminal mount(MTB409517) to Display Unit Mount Kit(CWA-245/246) use the screws removed in the previous section

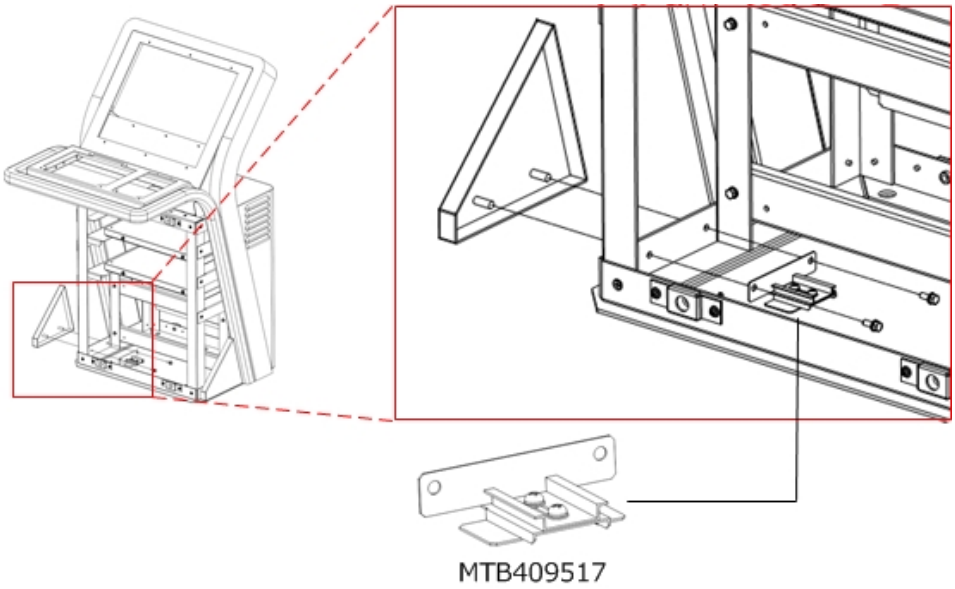

3) Attach the Relay terminal(H-7JTNA4061) to the DIN rail. Refer to figure below.

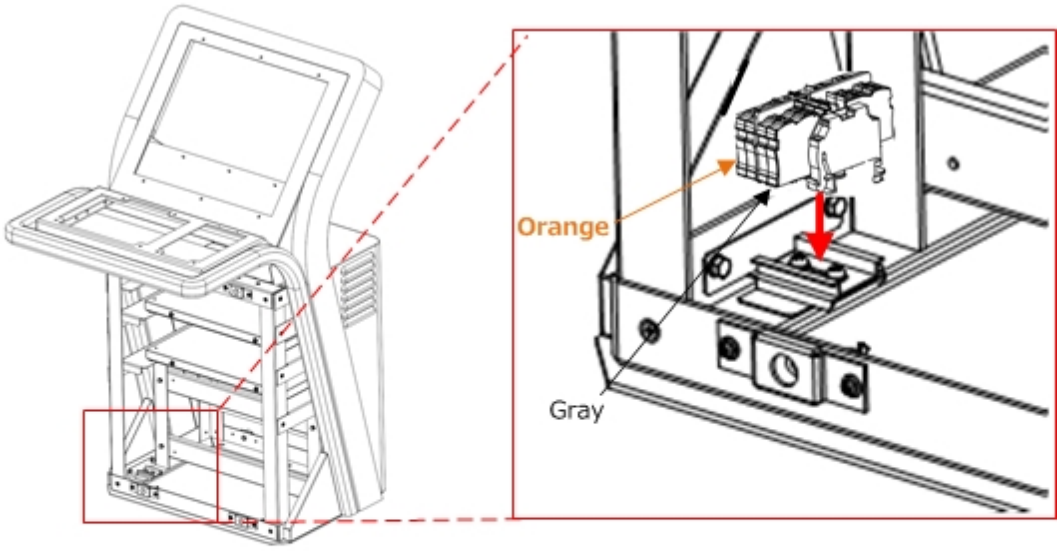

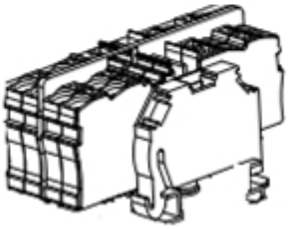

H-7JTNA4061

4) Make sure that Relay terminal is fixed as shown in the figure below.

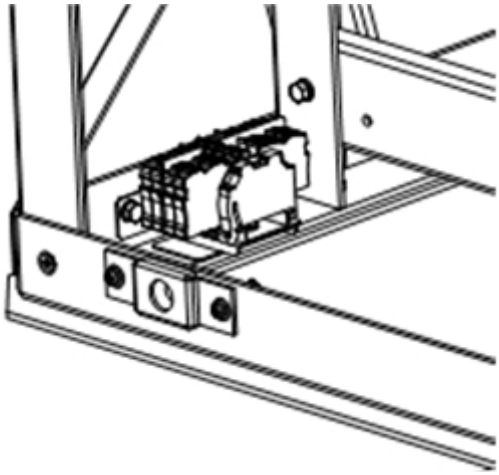

The installation of Relay terminal ends above

3.4.6 Connection of cables between unit

3.4.6.1 Wiring diagram

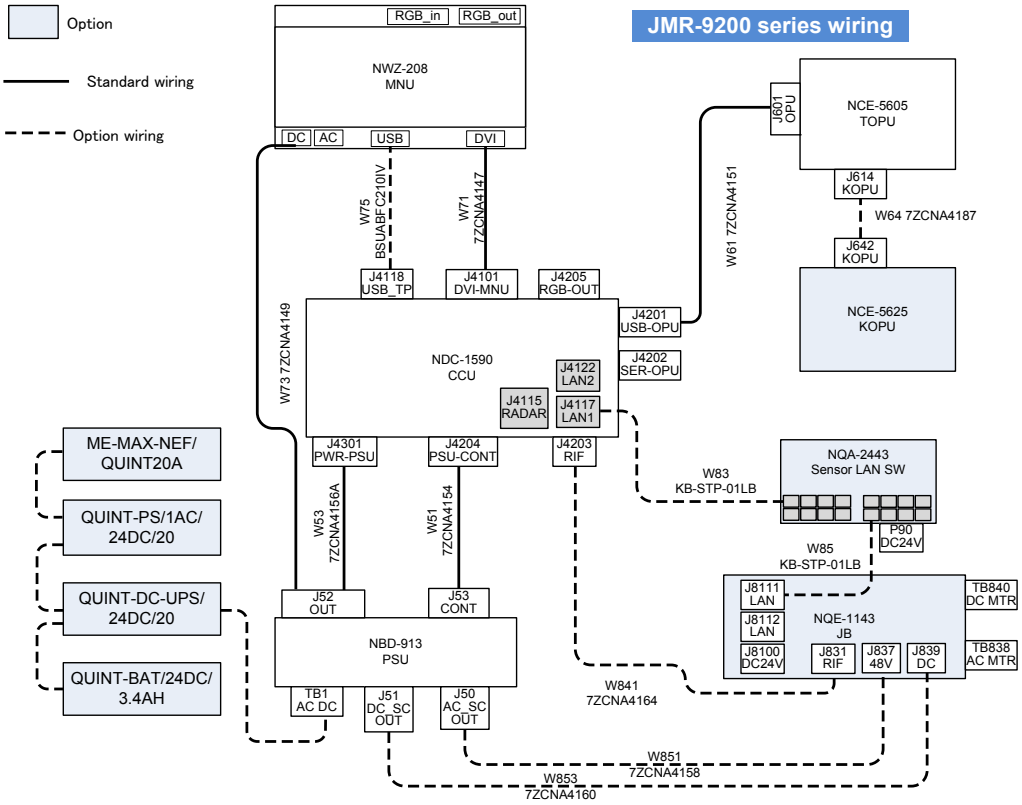

Fig 3-22: JMR-9200Series/JAN-9201/JAN-9202 Wiring Diagram

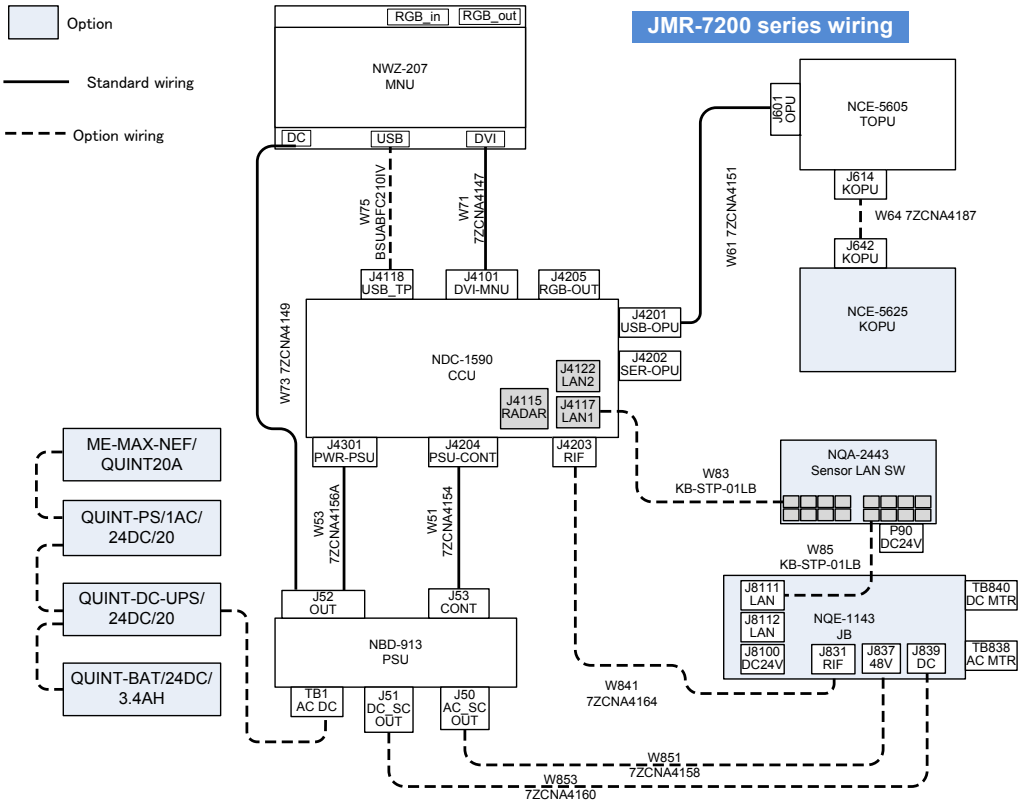

Fig 3-23: JMR-7200Series/JAN-7201/JAN-7202 Wiring Diagram

3.4.6.2 **Wiring of standalone type**

1) Attach the cable tie base(ANP-1, ANP-2) and nylon clip (AB-10N) to the 12 position shown in the figure below.

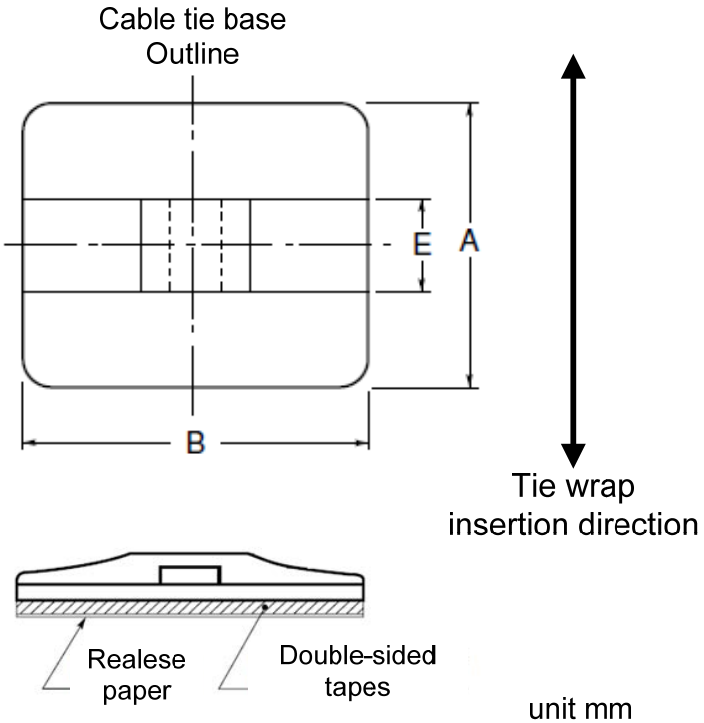

unit mm

Cable tie base	A	B	E	Cable tie type
ANP−1	20	20	7	T30R
ANP−2	25	30	8.2	T50R

Fig 3-24:Cable tie base ANP-1 and ANP-2

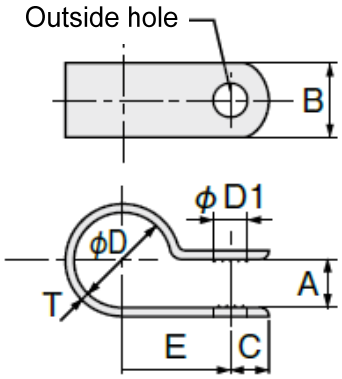

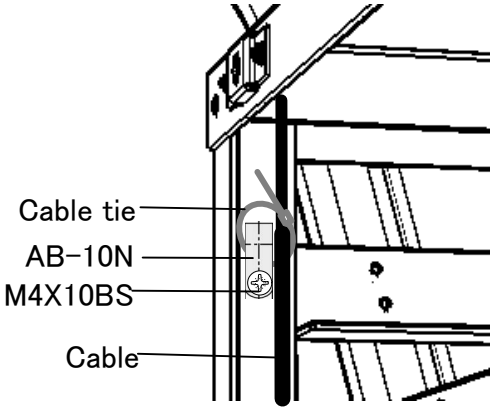

unit mm

	A	B	C	ϕD	ϕD1	E	T	Screw
AB−10N	6.3	9.5	4.8	16	4.3	15.9	1.1	M4×10

Fig 3-25 Nylon Clip AB-10N

Use the nylon clip as a clamp base. Refer to the above diagram.

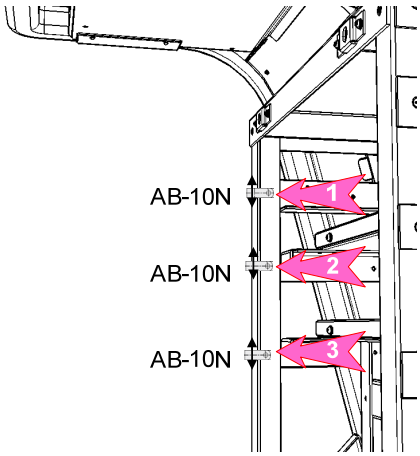

Left-hand side

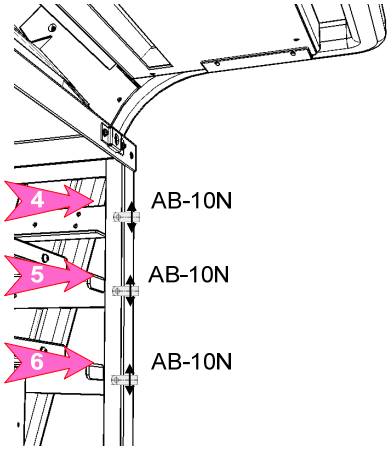

Right-hand side

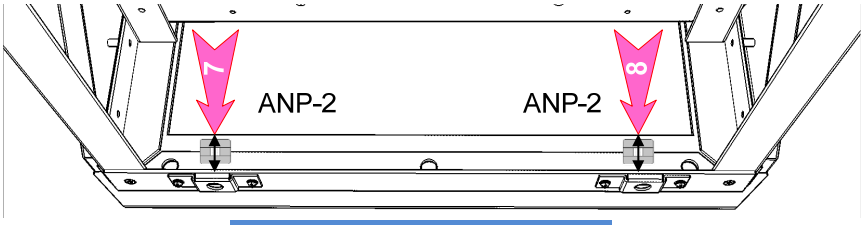

Bottom of the mount kit

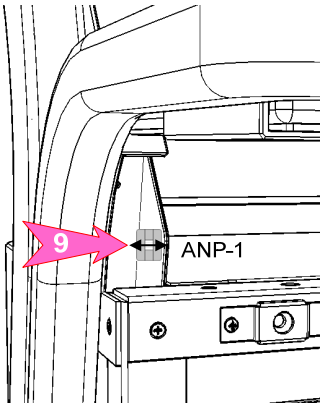

Top of the left-hand side

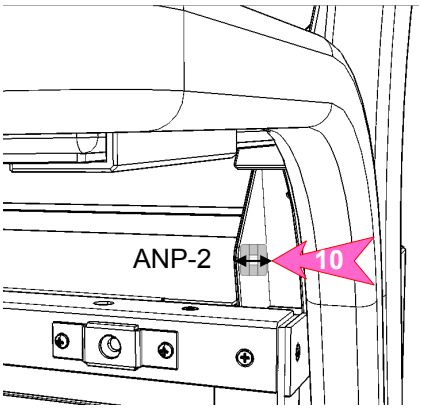

Top of the right-hand side

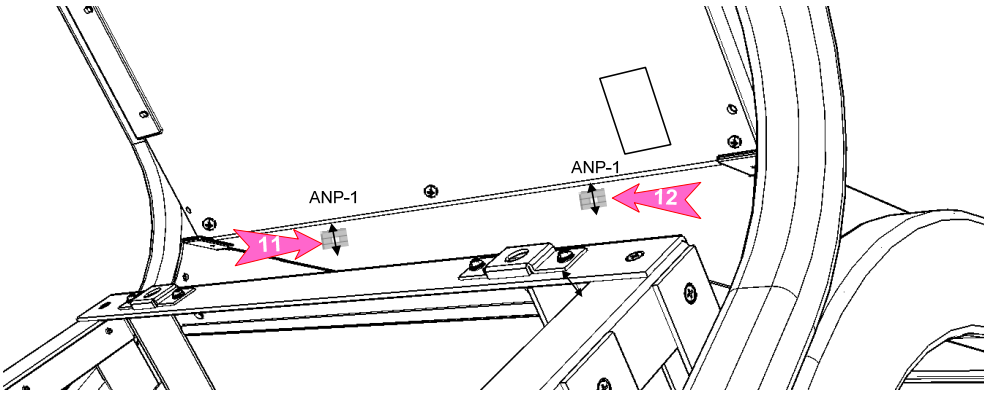

Back side of the operation unit

2) Connect the cable with the following procedure.

●For option wiring, refer to **3.5 Installation of Option Equipment**.

W71：H-7ZCNA4147(included in CML-901)

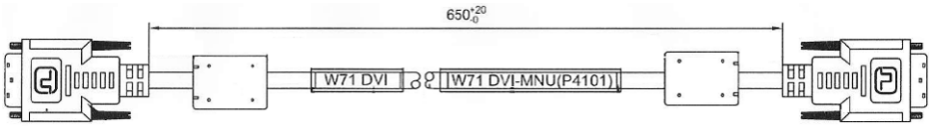

Connect the DVI connector on the Monitor unit and the J4101 connector on the CCU with W71: H-7ZCNA4147 cable.

⚠Be careful when connecting because it is easy to break the connection terminal of the DVI connector.

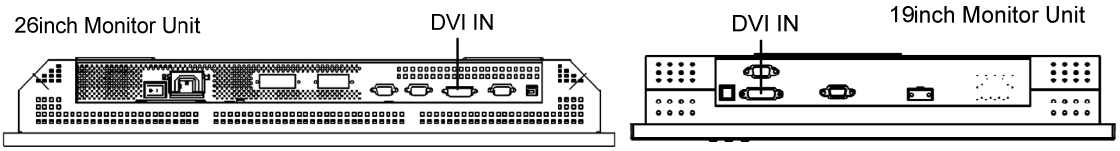

Wire the cable to pass through the nylon clip No.1 and the cable tie base No.9 and 11.

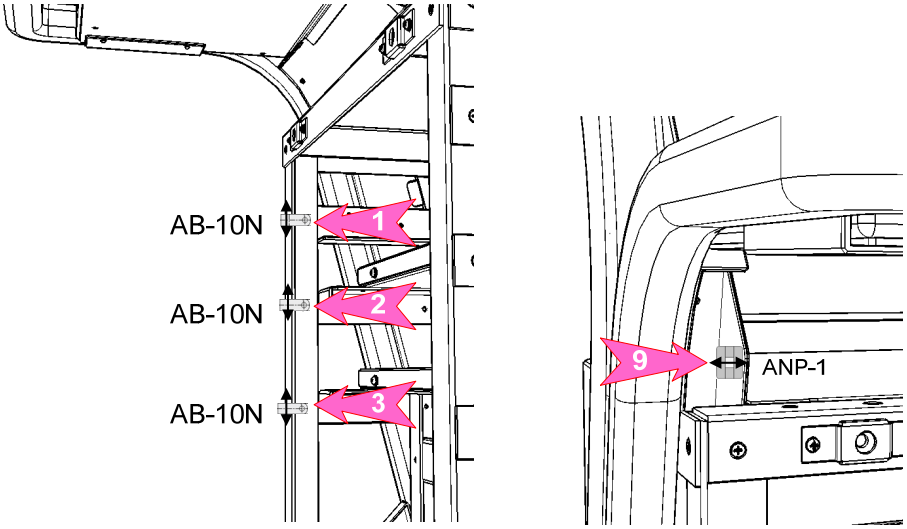

Left-hand side

Top of the left-hand side

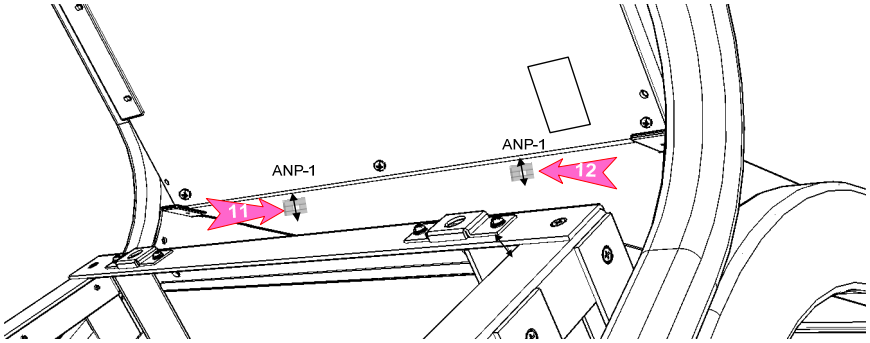

Back side of the operation unit

3) W73：H-7ZCNA4149(included in CML-901)

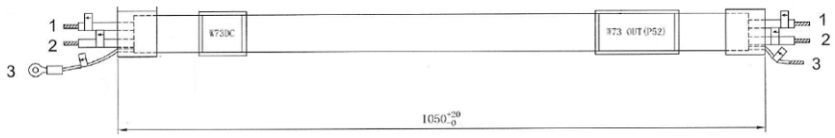

Connect the DC power connector on the monitor unit and the P52 connector on the PSU with W73: H-7ZCNA4149 cable.

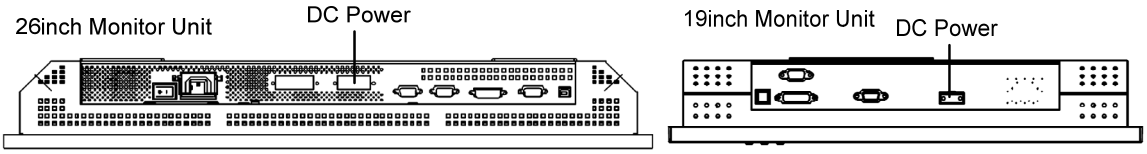

● Wiring to DC power connector on the Monitor

+: red(label: +24V)

-: black(label:24VE)

The polarities of the terminals are described near the connector.

The 26inch monitor unit DC power connector has 4 terminals. But only use pins No.2 and No.3.

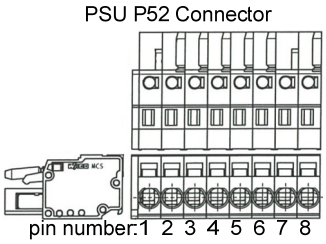

● Wiring to PSU-P52
1:red(label:P52-1)
2:black(label:P52-2)
3:shield(label:P52-3)

Wire the cable to pass through the nylon clip No.4, 5 and the cable tie base No.10 and 12.

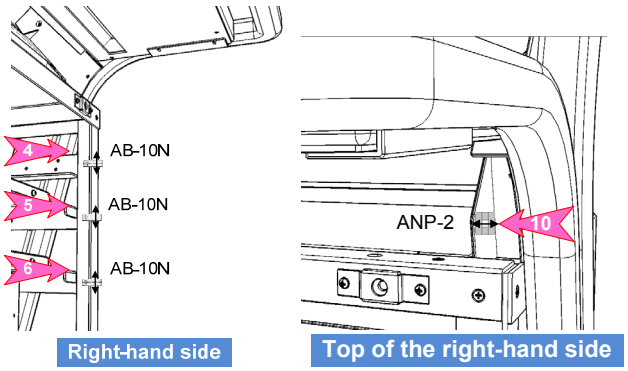

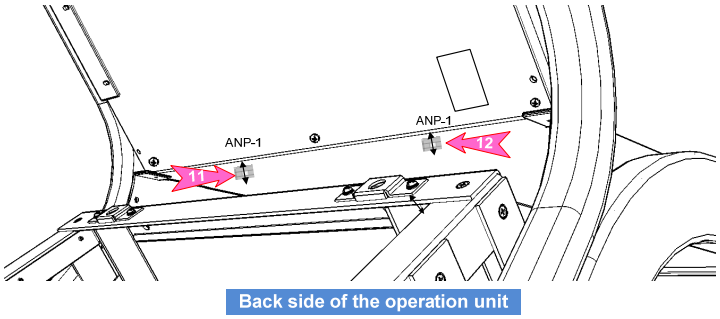

4) W53：H-7ZCNA4156A(CML-901)

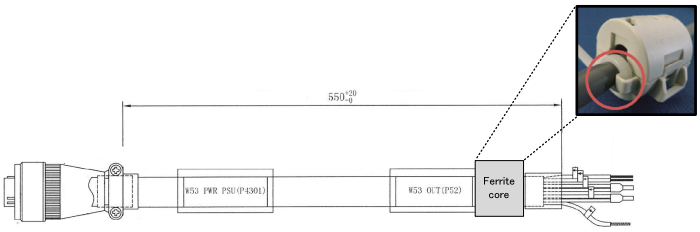

First, attach the ferrite core FL1:GTFC23-11-14 (included in CML-901) to the position shown in the figure above. After that, fix in the cable tie (included in CML-901).

Second, Connect the J4301 connector on the CCU and the P52 connector on the PSU with the W53: H-7ZCNA4156A cable.

Wire the cable to pass through the nylon clip No.5 and 6.

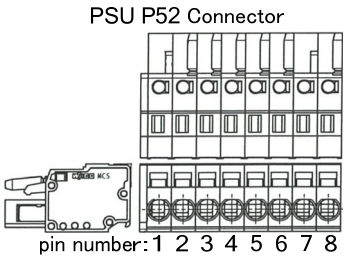

● Wiring to PSU–P52
4 : brown+orange+ferrule(label : P52-4)
5 : yellow+green+ferrule(label : P52-5)
6 : red(label : P52-6)
7 : black(label : P52-7)
8 : shield(label : P52-8)

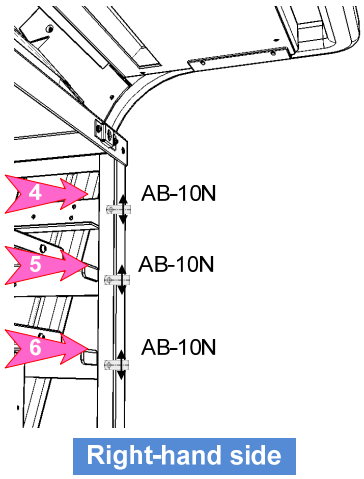

5) W51：H-7ZCNA4154(CML-901)

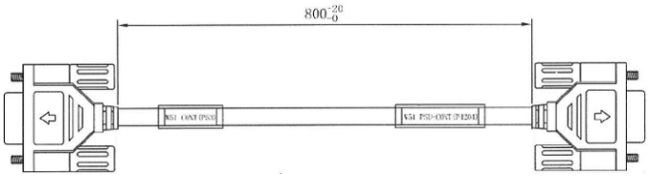

Connect the J4204 connector on the CCU and the P53 connector on the PSU with the W51: H-7ZCNA4154 cable.

Wire the cable to pass through the nylon clip No.4, 5 and 6.

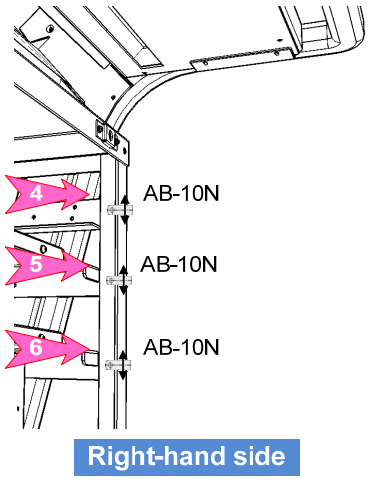

6) W61 : H-7ZCNA4151(CML-901)

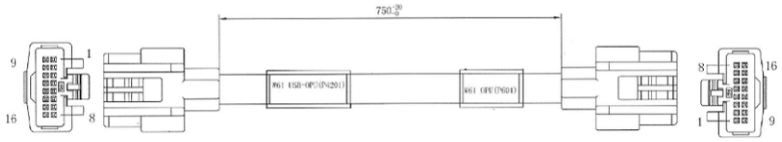

Connect the J601 connector on the TOPU and the J4201 connector on the CCU with the W61: H-7ZCNA4151 cable.

TOPU J601 Connector

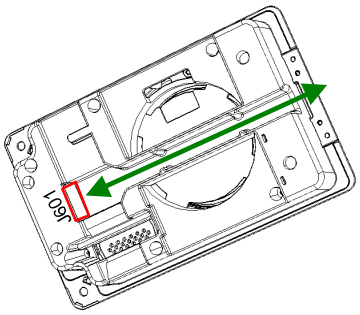

Wire the cable to pass through the nylon clip No.4 and the cable tie base No.10.

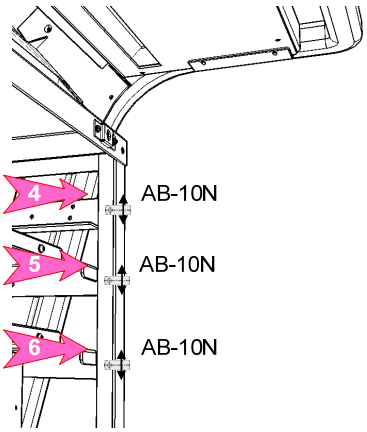

Right-hand side

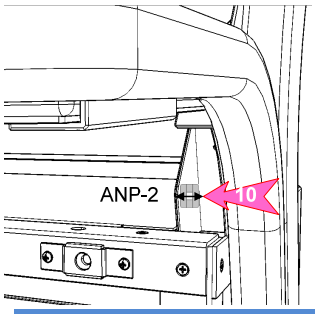

Top of the right-hand side

7) W90/91 : H-7ZCNA4214(CML-901)

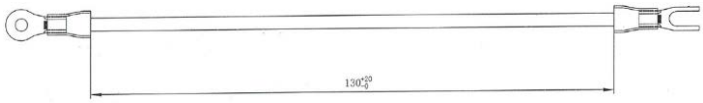

Connect the FG terminal of the CCU/PSU and the frame with the W90/W91: H-7ZCNA4214 cable.

Y terminal : Frame side

Round terminal : CCU/PSU FG terminal

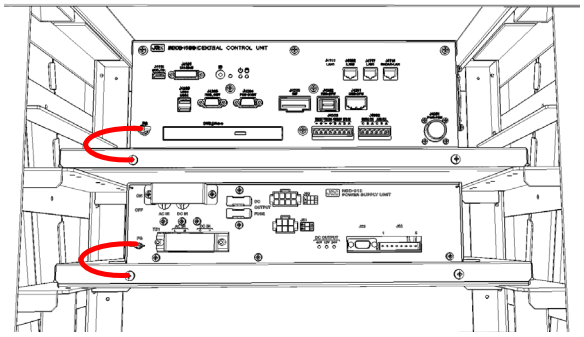

8) When installing touch panel unit(NWZ-208-TP, NWZ-207-TP)

Connect the USB-B connector on the monitor unit and J4118 USB-A connector on the CCU with CML-839 W75:BSUABFC201IV cable.

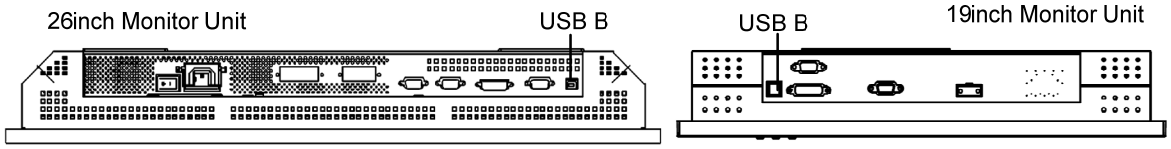

Wire the cable to pass through the nylon clip No.1 and the cable tie base 9 and 11.

26inch touch panel monitor unit

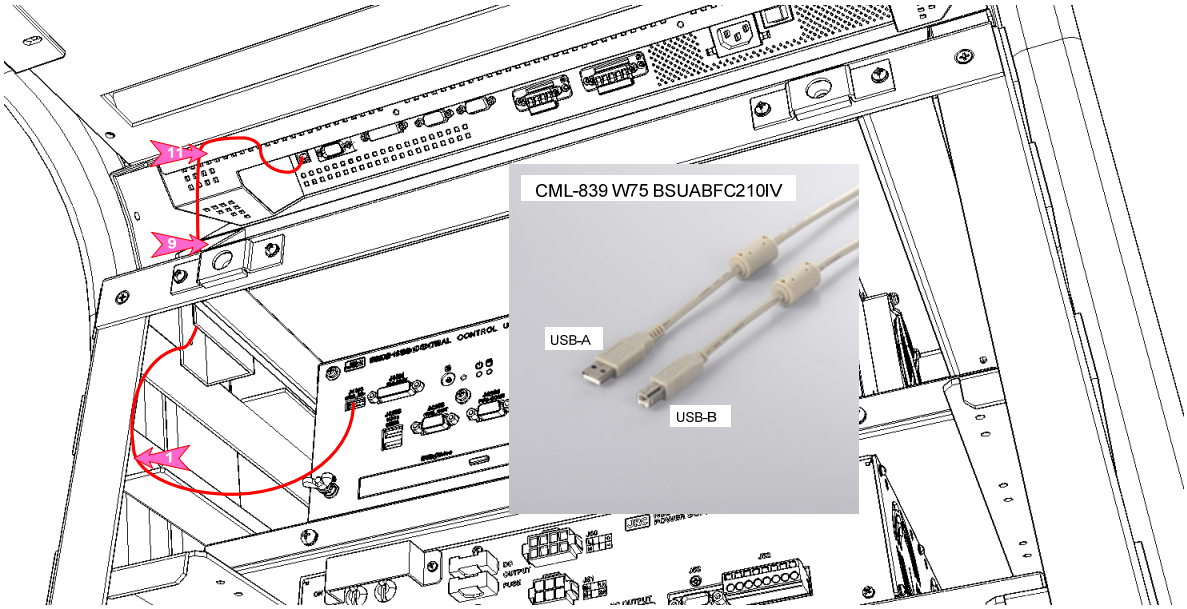

19inch touch panel monitor unit

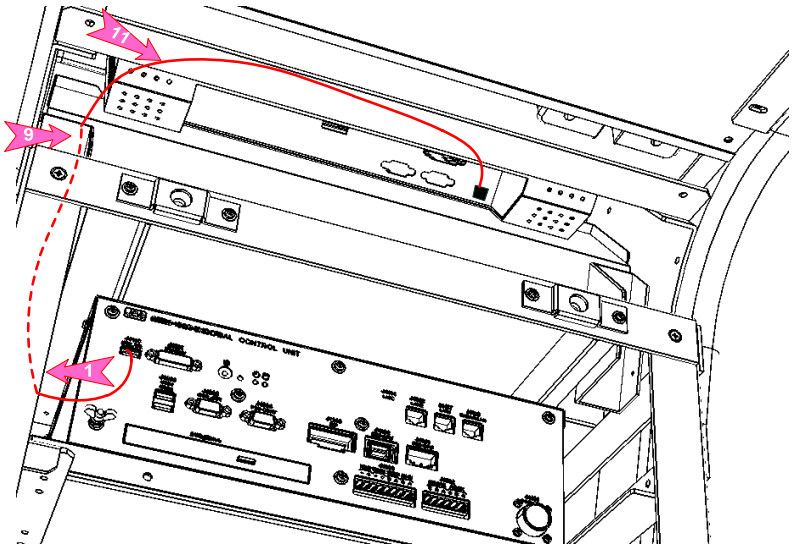

9) Fasten the cable using the T30R/T50R cable tie to the cable tie base.

ANP-1: Use the T30R

ANP-2: Use the T50R

AB-10N: No.1 – Use the T30R

No.4,5,6 – Use the T50R

⚠Use the nylon clip as a clamp base. Do not use through the cable.

⚠If installing the Option unit, should fasten the cable after installed the option unit.

⚠Be careful so that the cables are not stretched.

⚠Fold in the cable length is left over.

⚠Don't forget the screw lock of the connector H-7ZCNA4147/4149/4154/4156A, because these connectors are screw locking type connector.

10) Install the front cover and rear cover.

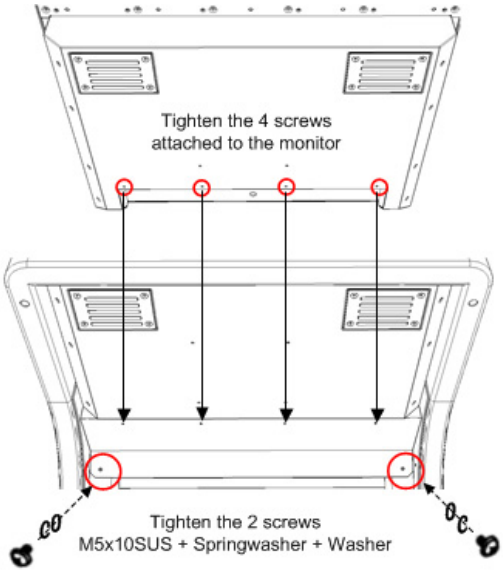

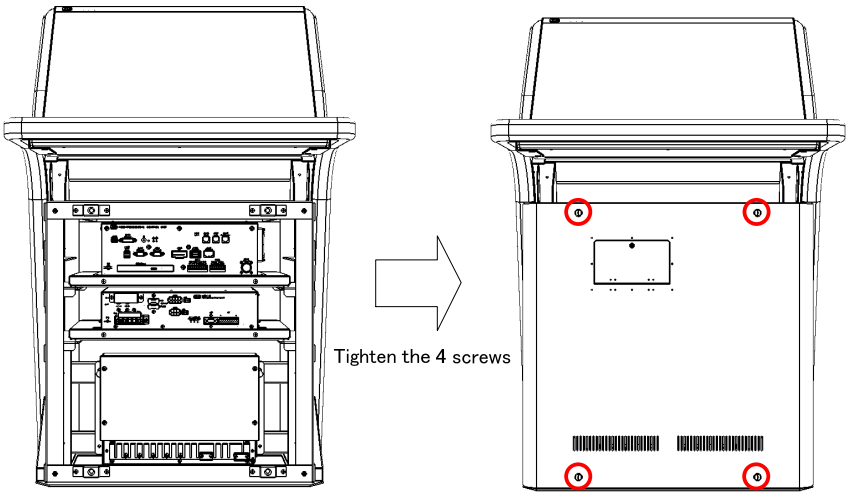

3.4.6.3 **Wiring of Desktop type**

1) Connect the cable with the following wiring diagram and procedure.

●For option wiring, refer to 3.5 **Installation of Option Equipment**.

W72：H-7ZCNA4148(CML-901-F)

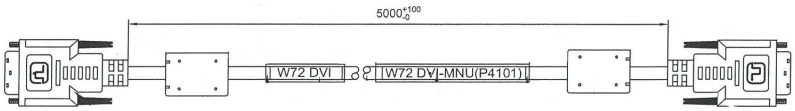

Connect the DVI connector on the Monitor unit and the J4101 connector on the CCU with W71: H-7ZCNA4148 cable.

⚠ Be careful when connecting because it is easy to break the connection terminal of the DVI connector.

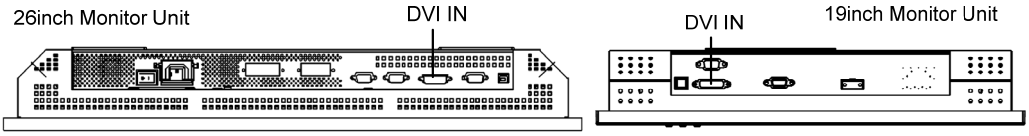

2) W74：H-7ZCNA4150(CML-901-F)

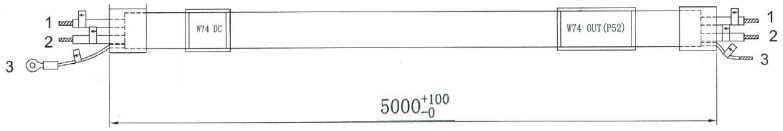

Connect the DC power connector on the Monitor unit and the P52 connector on the PSU with W74: H-7ZCNA4150 cable.

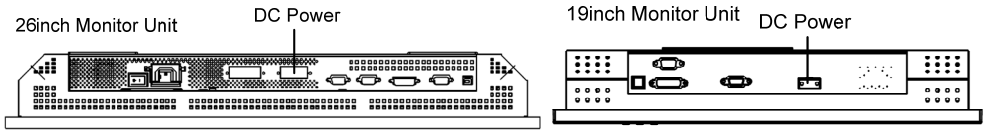

●Wiring to DC power connector on the Monitor

+: red(label: +24V)

- : black(label:-24V)

The polarities of the terminals are described near the connector.

The 26inch monitor unit DC power connector has 4 terminals. But only use pins No.2 and No.3.

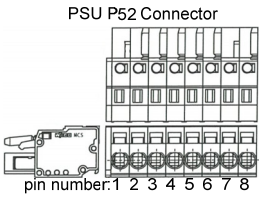

●Wiring to PSU-P52
1:red(label:P52-1)
2:black(label:P52-2)
3:shield(label:P52-3)

3) W54：H-7ZCNA4157A(CML-901-F)

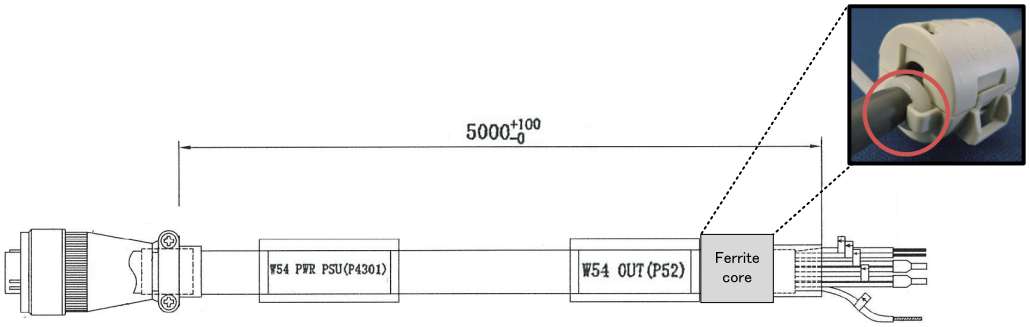

First, attach the ferrite core FL1:GTFC23-11-14 (included in CML-901-F) to the position shown in the figure above. After that, fix the ferrite core with cable tie (included in CML-901-F).

Second, Connect the J4301 connector on the CCU and the P52 connector on the PSU with the W54: H-7ZCNA4157A cable.

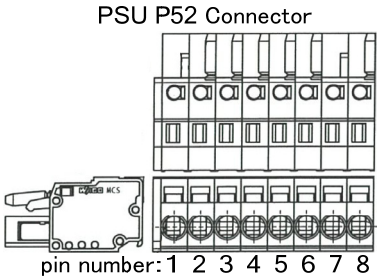

- Wiring to PSU–P52
  - 4 : brown+orange+ferrule(label : P52-4)
  - 5 : yellow+green+ferrule(label : P52-5)
  - 6 : red(label : P52-6)
  - 7 : black(label : P52-7)
  - 8 : shield(label : P52-8)

4) W52：H-7ZCNA4155(CML-901-F)

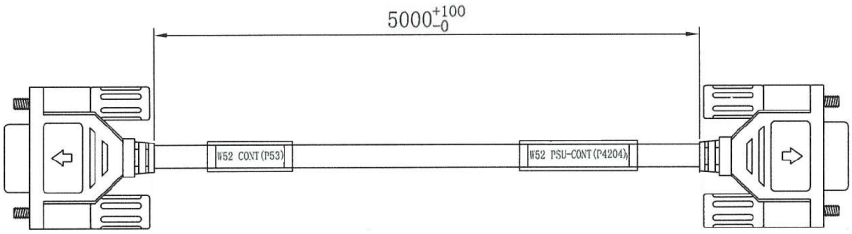

Connect the J4204 connector on the CCU and the P53 connector on the PSU with the W52: H-7ZCNA4155 cable.

5) W62：H-7ZCNA4152(CML-901-F)

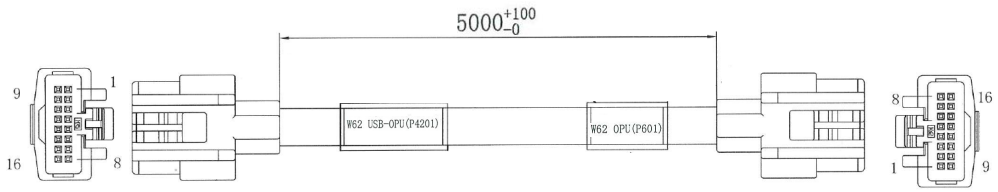

Connect the J601 connector on the TOPU and the J4201 connector on the CCU with the W62: H-7ZCNA4152 cable.

TOPU J601 Connector

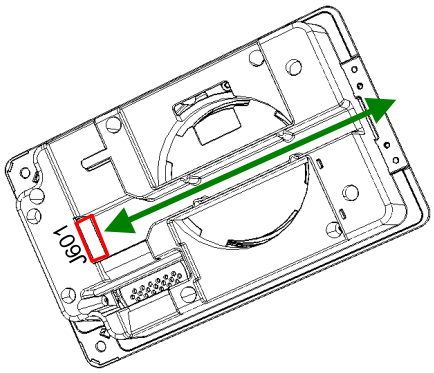

6) When installing touch panel unit(NWZ-208-TP, NWZ-207-TP)

Connect the USB-B connector on the monitor unit and J4118 USB-A connector on the CCU with CML-839 W75:BSUABFC201IV cable.

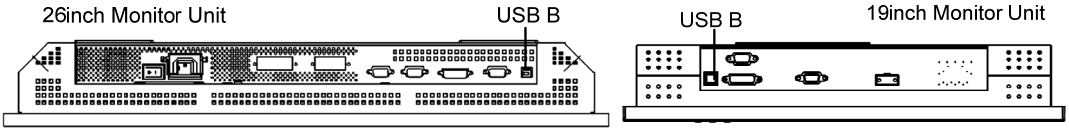

3.4.7 Wiring for Relay Terminal

CQD-2312 Relay Terminal distribute the AC/DC power to the each unit. Wire rod for distribute is attached to the Relay terminal. Process the cable. Refer to the following procedure.

3.4.7.1 **Processing of wire rod**

1) NBD-913 Power Supply Unit – wire rod for AC power

Cut the 2-core vinyl cab tire cable(VCT-2C-70/0.32) to length of the following. Remainder of this cable is not required. Please dispose it.

2) NBD-913 Power Supply Unit – wire rod for DC power

Cut the white vinyl cable(250V-HV-37/0.26(9)) and black vinyl cable(250V-HV-37/0.26-(0)) to length of the following.

⚠ Remainder of this cable to be used as AC/DC power cable for option unit(Serial LAN interface circuit, Sensor LAN SW, UPS). Process to cut so as not to waste. Do not dispose until all wiring is complete.

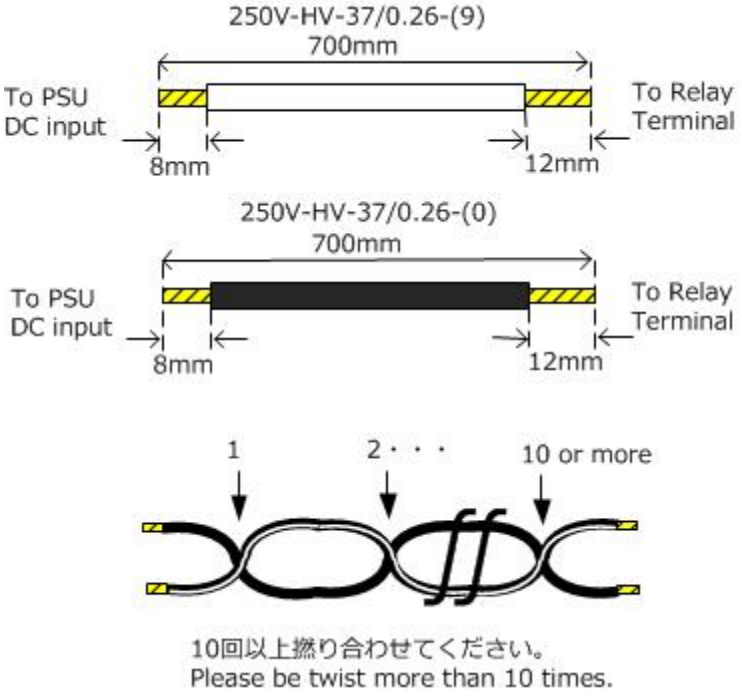

When CMH-2370 Serial LAN interface circuit is arranged

3) CMH-2370 Serial LAN interface circuit - wire rod for DC power

Cut the white vinyl cable(250V-HV-37/0.26(9)) and black vinyl cable(250V-HV-37/0.26-(0)) to length of the following. This cable is remainder of previous section.

⚠ Remainder of this cable to be used as AC/DC power cable for option unit(Serial LAN interface circuit, Sensor LAN SW, UPS). Process to cut so as not to waste. Do not dispose until all wiring is complete.

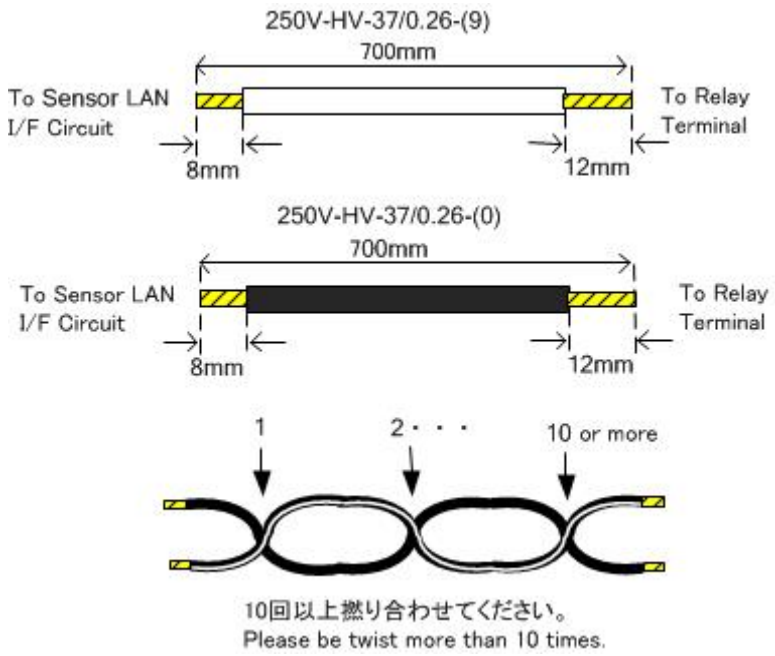

When NQA-2443 SENSOR LAN SW is arranged

4) CMH-2370 Serial LAN interface circuit - wire rod for DC power

Cut the white vinyl cable(250V-HV-37/0.26(9)) and black vinyl cable(250V-HV-37/0.26-(0)) to length of the following. This cable is remainder of previous section.

⚠ Remainder of this cable to be used as AC/DC power cable for option unit(Serial LAN interface circuit, Sensor LAN SW, UPS). Process to cut so as not to waste. Do not dispose until all wiring is complete.

In case of the 26inch Display Unit Mount Kit(CWA-246)

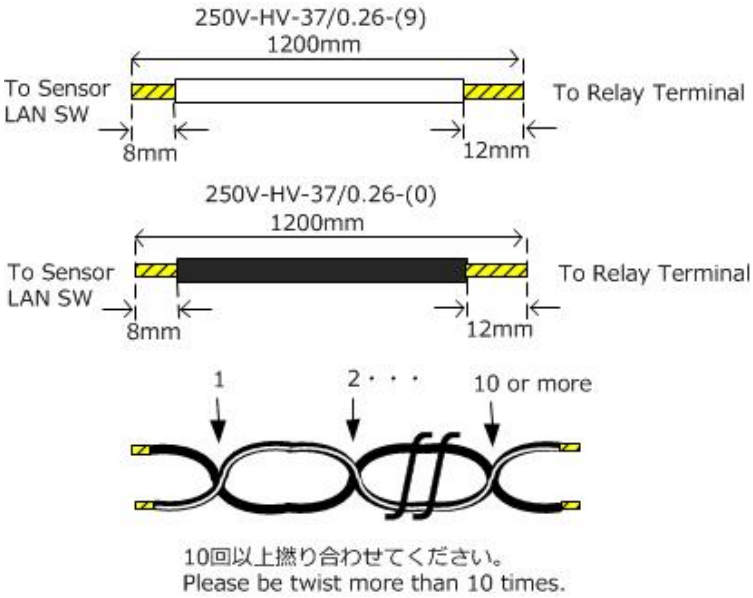

In case of the 19inch Display Unit Mount Kit(CWA-245)

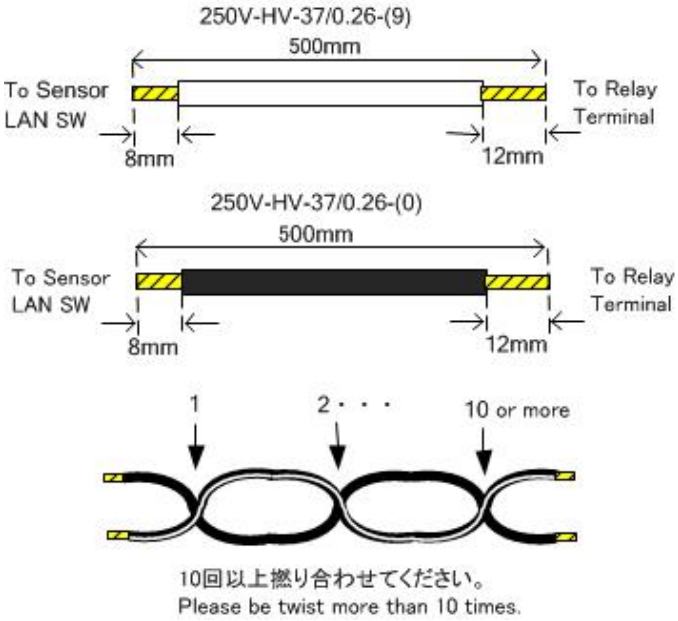

When UPS is arranged

5) UPS - wire rod for DC power output

CMH-2370 Serial LAN interface circuit - wire rod for DC power

Cut the white vinyl cable(250V-HV-37/0.26(9)) and black vinyl cable(250V-HV-37/0.26-(0)) to length of the following. This cable is remainder of previous section

⚠ Remainder of this cable to be used as AC/DC power cable for option unit(Serial LAN interface circuit, Sensor LAN SW, UPS). Process to cut so as not to waste. Do not dispose until all wiring is complete.

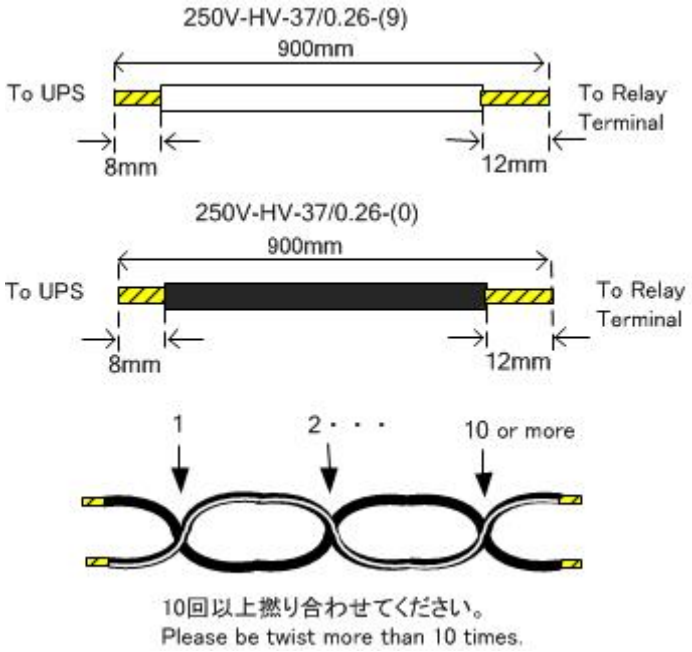

6) UPS - wire rod for AC power input

Cut the 3-core vinyl cab tire cable cable(250V-HV-37/0.26(9)) and black vinyl cable(250V-HV-37/0.26-(0)) to length of the following. Crimp the crimp terminal to white cable at terminal block side. Remainder of this cable is not required. Please dispose it.

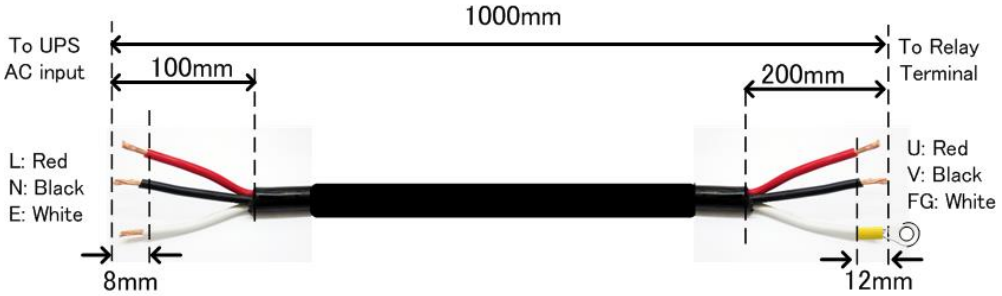

3.4.7.2 **Connection of Unit and Relay Terminal**

Connect Relay terminal and each unit(NBD-913 Power Supply Unit, CMH-2370 Serial LAN interface circuit, NQA-2443 SENSOR LAN SW, UPS). Use a wire obtained by processing in the previous section

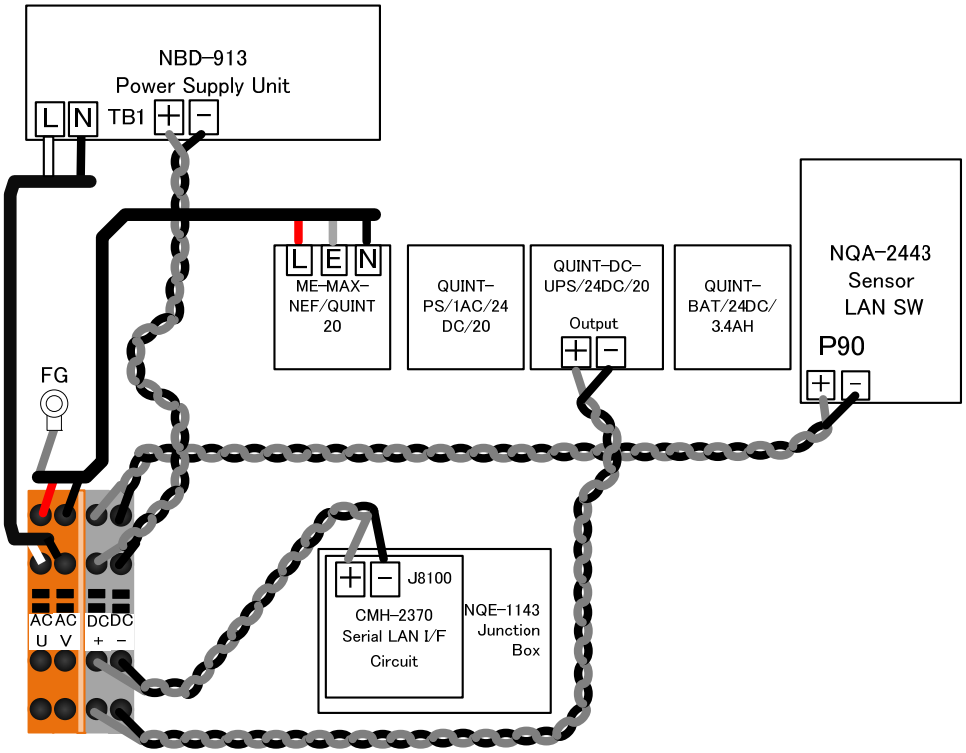

CQD-2312 Relay Terminal Wiring diagram

1) Wiring to the NBD-913 Power Supply Unit

- Wire the 2-core vinyl cab tire cable(VCT-2C-70/0.32) 550mm to the terminal block(TB1) L and N on NBD-913 Power Supply Unit. L,U : White N,V : Black

- Wire the white vinyl cable(250V-HV-37/0.26(9)) and black vinyl cable(250V-HV-37/0.26-(0)) was cut to 700mm to the terminal block(TB1) + and – on NBD-913 Power Supply Unit.
  + : White, - : Black

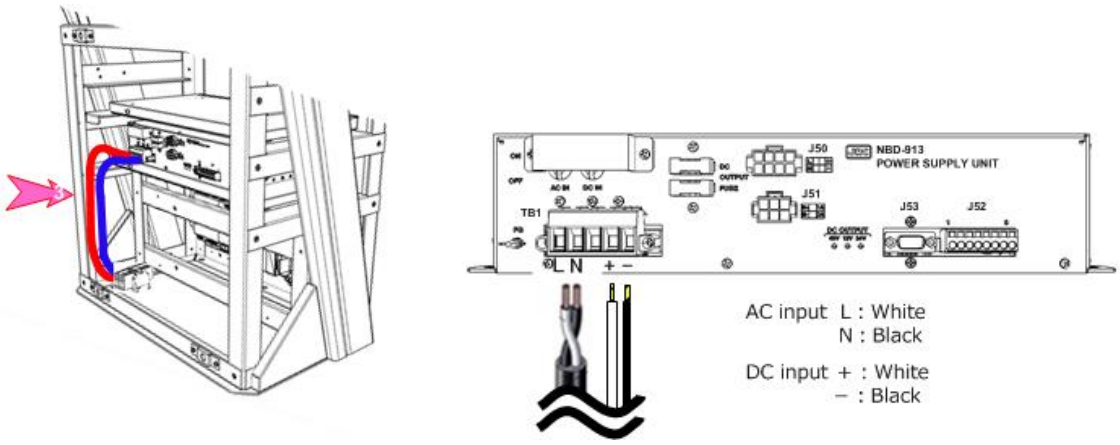

Wire the cable to pass through the nylon clip No.3.

2) When NQA-2443 SENSOR LAN SW is arranged

- Refer to the **3.5.3 Installation of Sensor LAN Unit** for procedure of the installation.
- Wire the white vinyl cable(250V-HV-37/0.26(9)) and black vinyl cable(250V-HV-37/0.26-(0)) to the terminal block(P90) + and – on NQA-2443 Power Supply Unit.

  + : White, - : Black

- Cable length

  CWA-245 19inch Display Unit Mount Kit - 500mm

  CWA-246 26inch Display Unit Mount Kit - 1200mm

⚠ When fix the cable, keep extra length so that there is no stress to terminal block(P90) for power supply to the NQA-2443 SENSOR LAN SW.

When 26inch Display Unit Mount Kit(CWA-246) is arranged

- Attach the cable tie base ANP-2 to the position of No.13, No.14, No.15 and No.16. And wire the cable. (Refer to figure below)
- Fix the power supply cable of NQA-2443 SENSOR LAN SW to the ANP-2 by use the cable tie;T50R

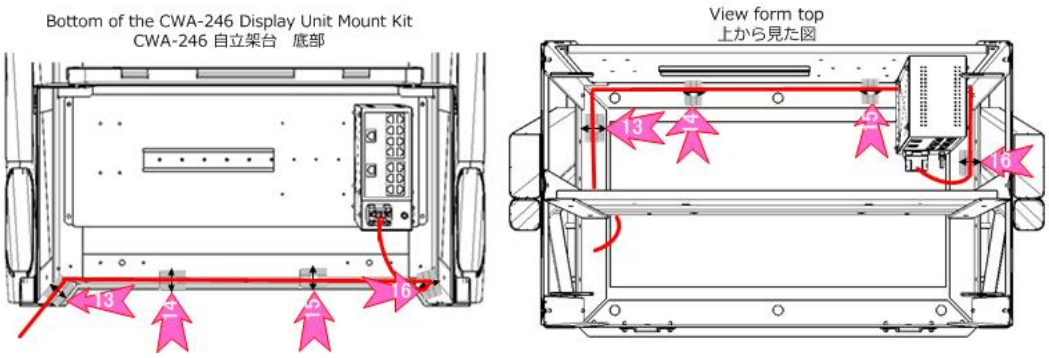

When 19inch Display Unit Mount Kit(CWA-245) is arranged

- Attach the cable tie base ANP-2 to the position of No.13. And wire the cable.(refer to figure below)

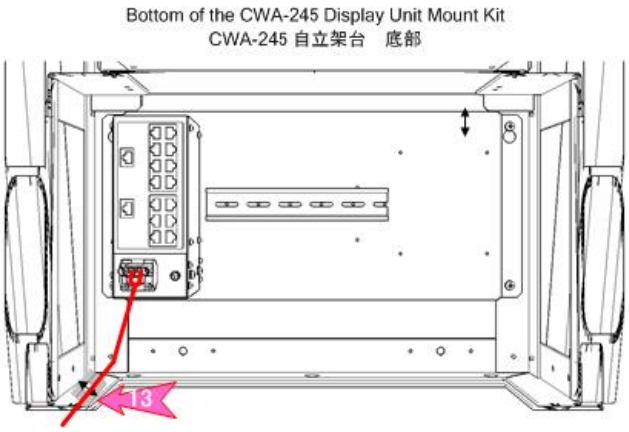

Wiring to the CQD-2312 Relay Terminal(Common in CWA-245 and CWA-246)

At the terminal block side, wire the cable to the position surrounded by the circle in the figure below.

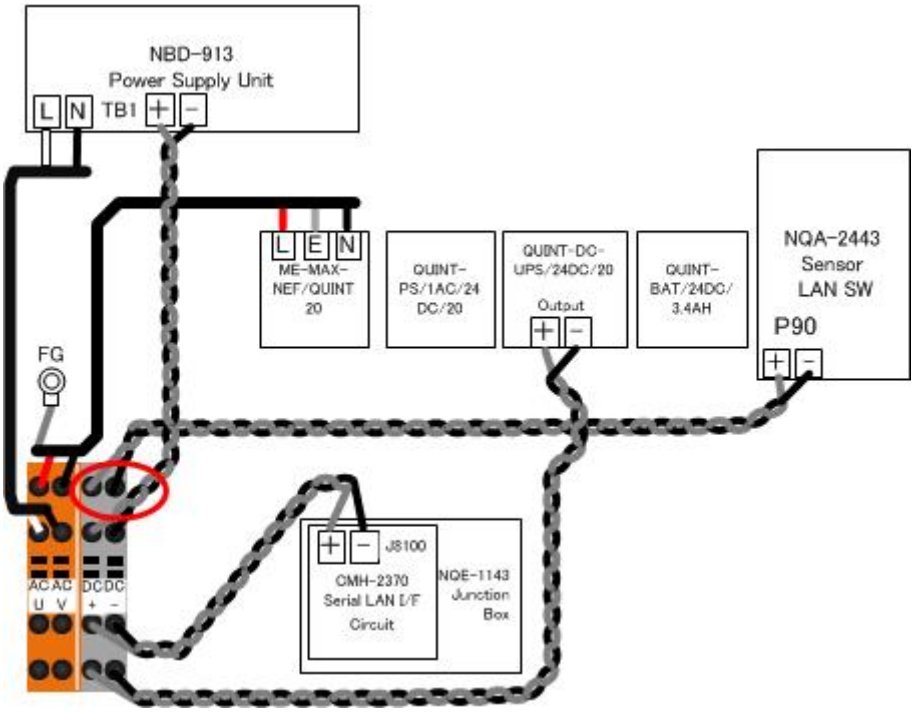

3) When UPS is arranged

- Refer to the **3.5.4 Installation of UPS** for procedure of the installation.
- Wire the 3-core vinyl cab tire cable cable(250V-HV-37/0.26(9)) 1000mm to the terminal block L,E and N on the ME-MAX-NEF/QUIT20.

  L : Red, E : White, N : Black
- Wire the white vinyl cable(250V-HV-37/0.26(9)) 900mm and black vinyl cable(250V-HV-37/0.26-(0)) 900mm to the output terminal block + and – on QUINT-DC-UPS/24DC/20.

  + : White - : Black

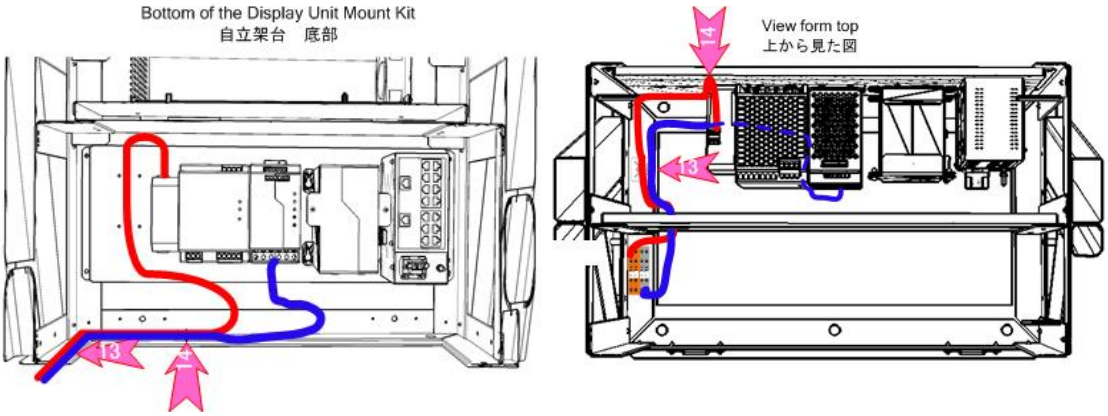

- Attach the cable tie base ANP-2 to the position of No.13 and No.14. And wire the cable.(refer to figure above)

- At the terminal block side, wire the cable to the position surrounded by the circle in the figure below.
  AC-U : Red (VCT-3C-45/0.32)
  AC-V : Black (VCT-3C-45/0.32)
  DC+ : White (250V-HV-37/0.26-(9))
  DC- : Black(250V-HV-37/0.26-(0))

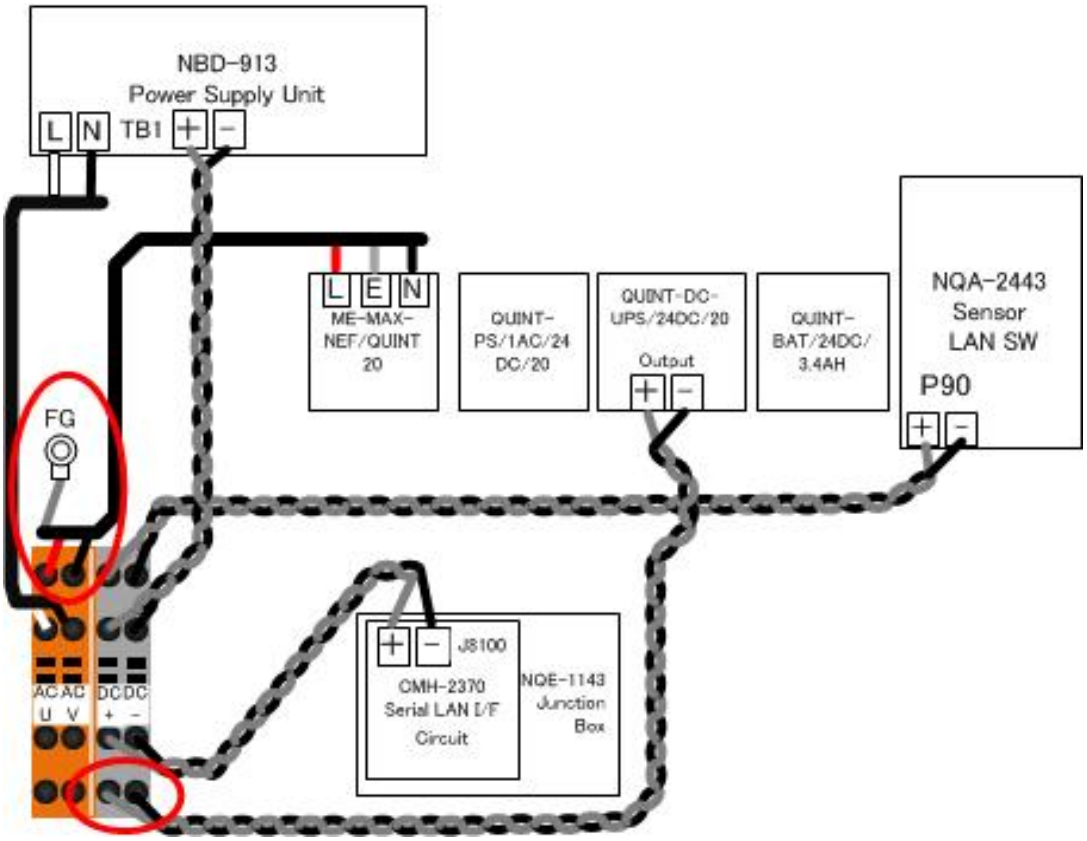

Fix the crimped white cable to the thumbscrew.(Refer to figure below)

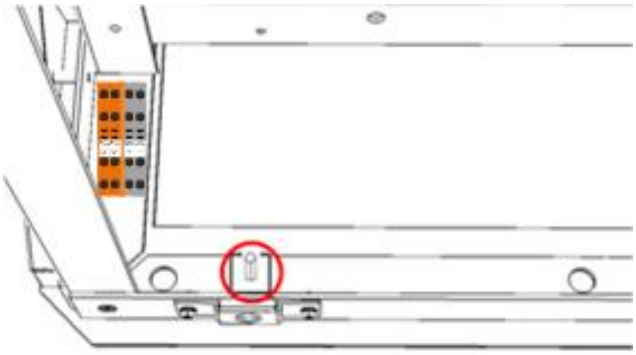

Bottom view(Left hand side)

4) When CMH-2370 Serial LAN interface circuit is arranged

- Refer to the **3.5.1.1 Installation of Serial LAN Interface Circuit (SLC)** and **3.5.1.5 Installation of JB** for procedure of the installation.
- Wire the white vinyl cable(250V-HV-37/0.26(9)) 700mm and black vinyl cable(250V-HV-37/0.26-(0)) 700mm to the terminal block(J8100) 24V+ and 24V GND on CMH-2370 Serial LAN interface circuit.
  24V+ : White　24V GND : Black

⚠ When coil is attached to the CMH-2370 Serial LAN interface circuit, Refe to the 3.5.1.5 Installation of JB. And connect the power cable through the coil.

- At the terminal block side, wire the cable to the position surrounded by the circle in the figure below.
  DC+ : White
  DC- : Black

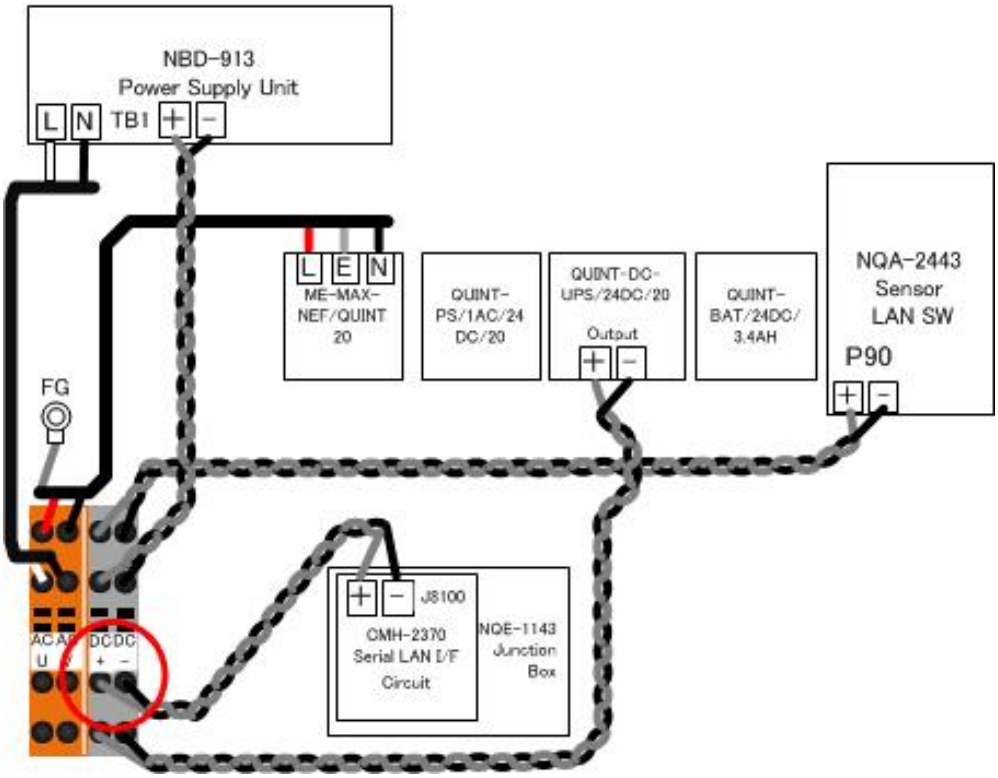

procedure of the main power supply connection, refer to the 3.13 Initialization for the specified model Initialization for the specified model.

⚠ Before connecting the inboard power, please have finished all the necessary connections.

3.5 Installation of Option Equipment

3.5.1 Installation of Junction Box

NQE-1143 Junction Box(JB) consists of interface boards that corresponds with the suffix.

Type of JB is shown in the table below.

The suffix is defined by the initials of the board from left when viewed from the front of the JB. Initials of the board not installing are omitted.

Suffix	SLC	AOC	GIF	RIF	SLC#2
-R				✓	
-S	✓				
-SR	✓			✓	
-SS	✓				✓
-GR			✓	✓	
-SAR	✓	✓		✓	
-SA	✓	✓			
-SGR	✓		✓	✓	
-SAGR	✓	✓	✓	✓	
-SG	✓		✓		
-SAG	✓	✓	✓		
-SAS	✓	✓			✓

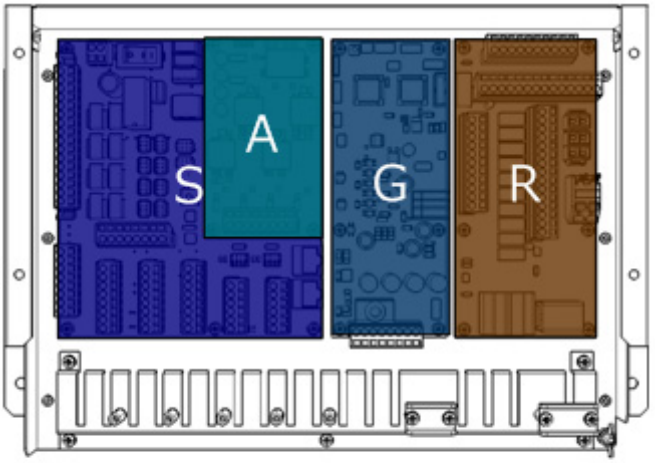

NQE-1143-SAGR

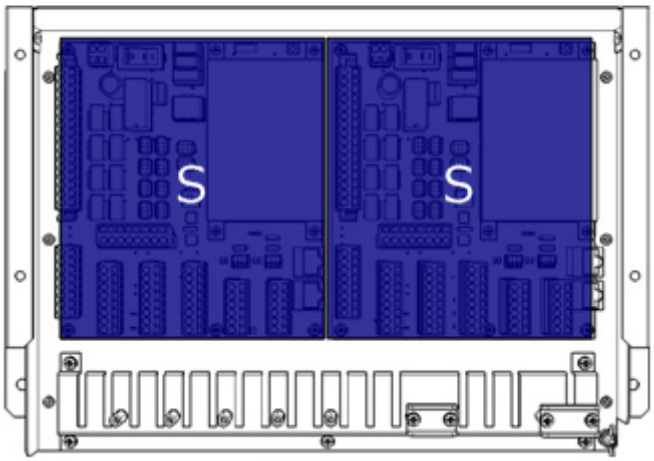

NQE-1143-SS

Therefore, the type of JB :「NQE-1143-SAGR」is shown that JB consists of SLC, AOC, GIF and RIF.

■Installation Procedure

Refer to the figure below. Skip the Installation procedure of the not installing board.

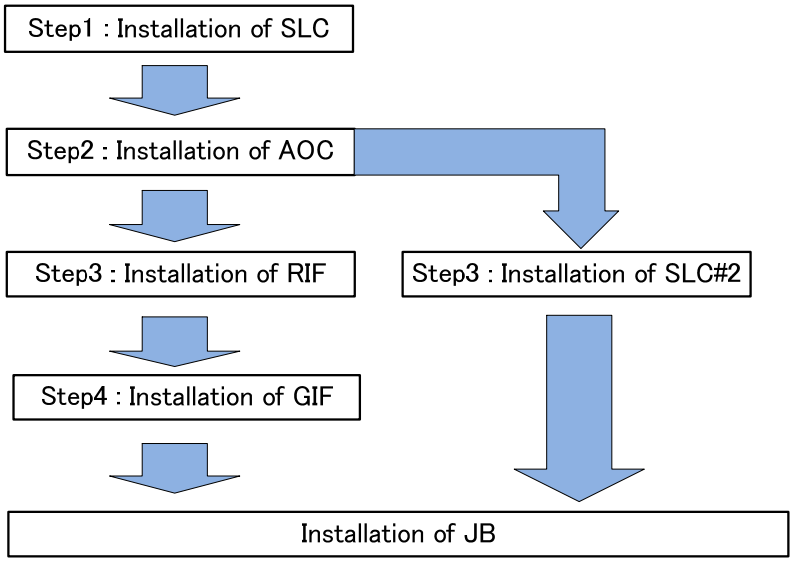

■Board installing parts

Install the boards using MPTG32506 attached to the JB frame.

MPTG32506	
Pan head screw BSNC03006B ×21	Hex Spacer BRBP06403 ×4

3.5.1.1 **Installation of Serial LAN Interface Circuit (SLC)**

1) Install the SLC to the position shown in the figure below using the 5 pan head screws (BSNC03006B) from MPTG32506.

2) Install the shield case to the position shown in the figure below using the 4 pan head screws (BSNC03006B) from MPTG32506.

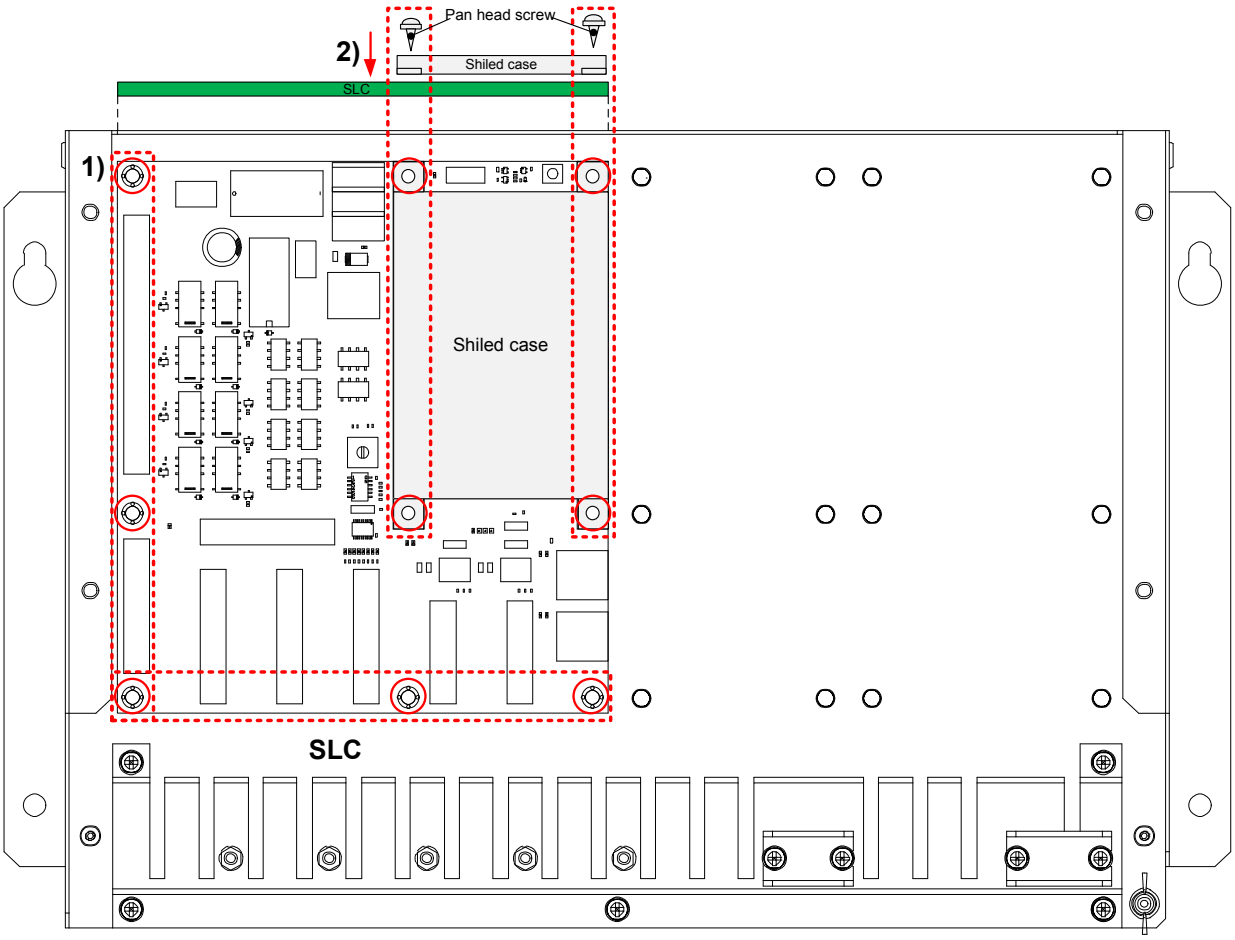

●When installing the two SLC to a junction box

1) Replace the hex spacer in JB shown in the figure below.

⚠ The hex spacer of the rightmost column is reuse.

2) Install the SLC#2 to the position shown in the figure below using the 9 pan head screws (BSNC03006B) from MPTG32506.

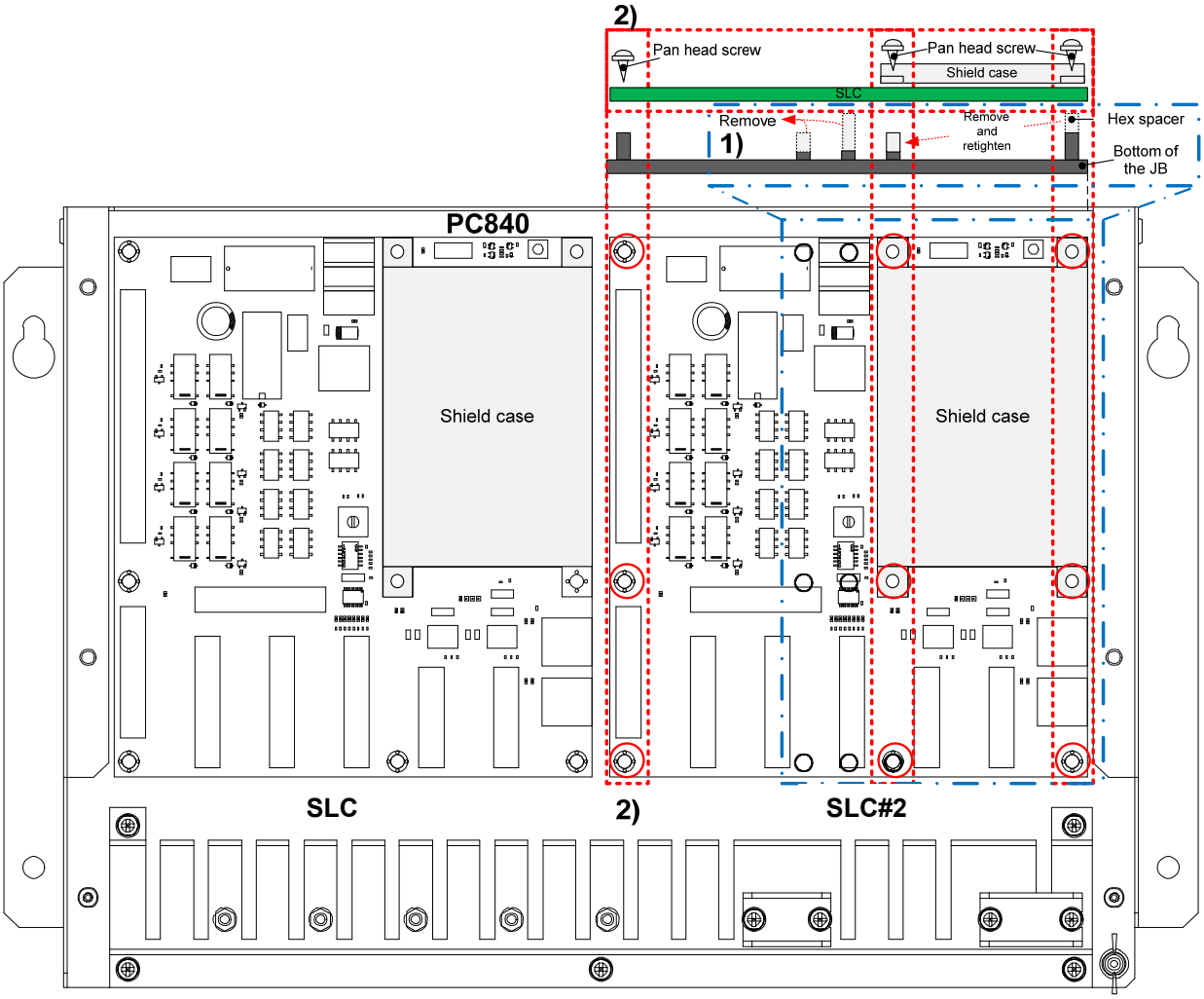

■Installation of the attachment of the SLC

Note: If the coil with cable is not included, there is no need for the following procedure.

1) If the cable with coil in the figure below is included with the SLC,connect the coils to the P8100 terminal block plug on the SLC.

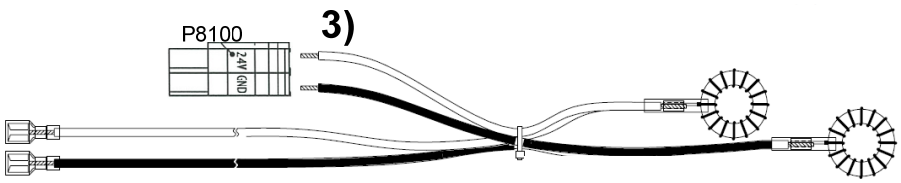

2) Fix the pair of coils to the cable tie base. Refer to figure for fixing the coil.

In case of SLC#2, attach as well another pair.

2) Figure for fixing the coil

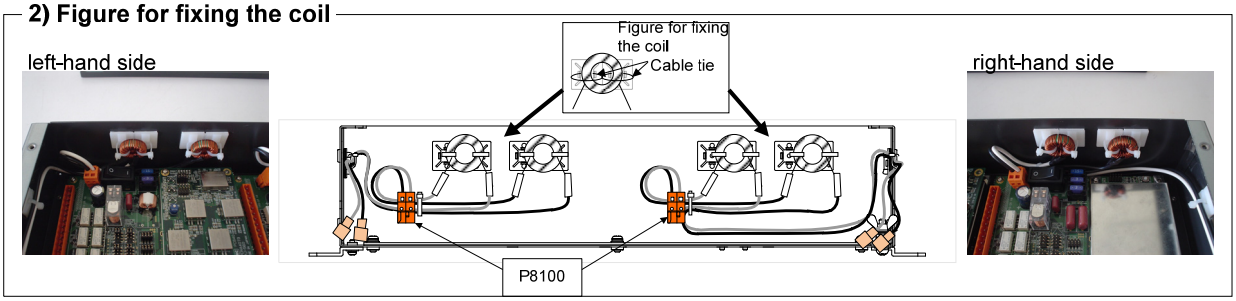

3) Wire the cable, refer to wiring figure below.

3) Wiring figure

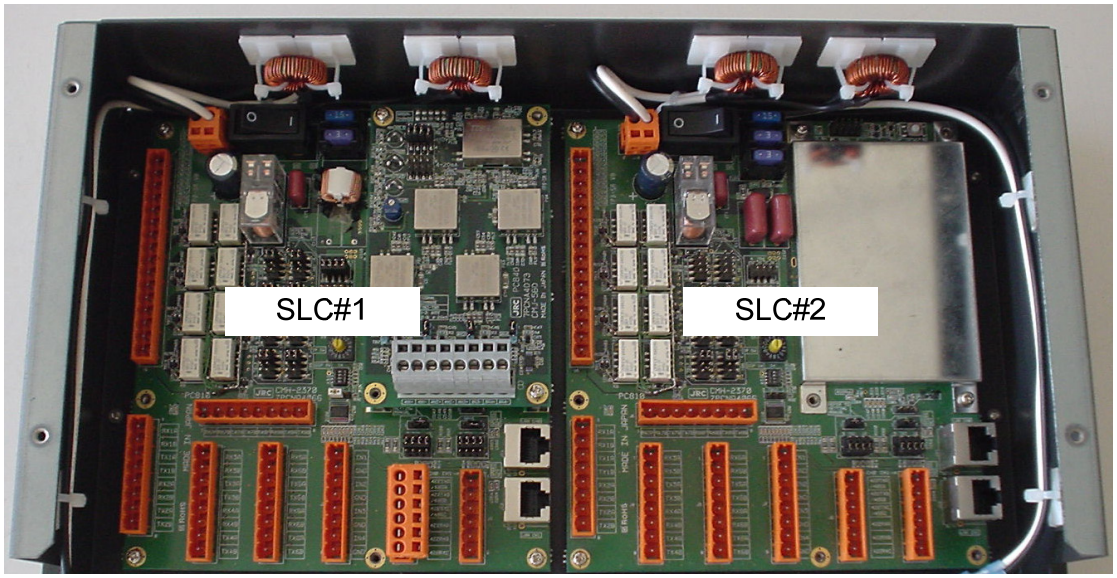

3.5.1.2 **Installation of Analog Option Circuit (AOC)**

1) Install the SLC(PC810) to the position shown in the figure below using the 5 pan head screws (BSNC03006B) from MPTG32506.

2) Install the shield case to the position shown in the figure below using the 4 hex spacers (BRBP06403) from MPTG32506.

3) Install the AOC(PC840) to the position shown in the figure below using the 4 pan head screw (BSNC03006B) from MPTG32506.

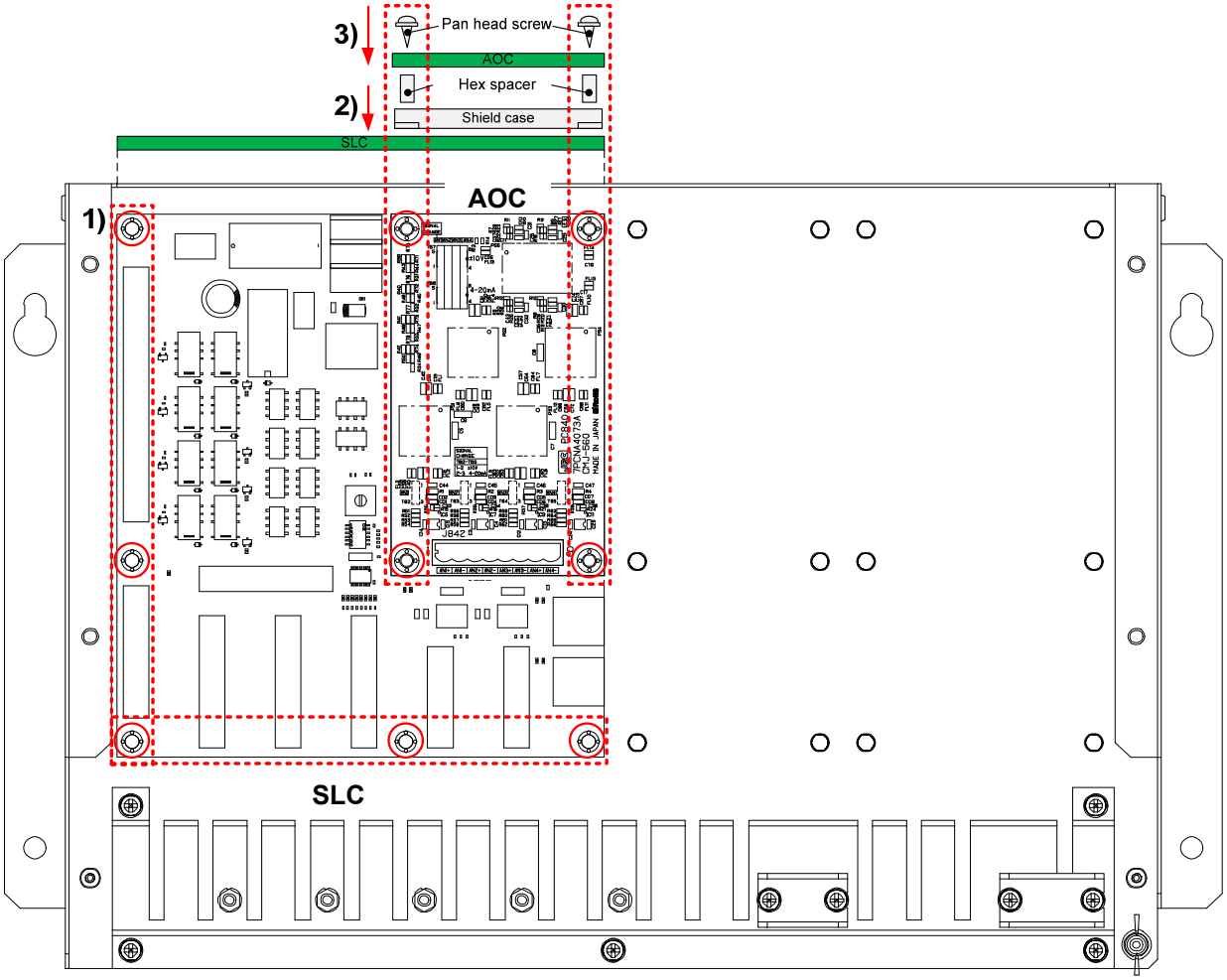

3.5.1.3 **Installation of Radar Interface Circuit (RIF)**

1) Install the RIF(PC830) to the position shown in the figure below using the 6 pan head screws (BSNC03006B) from MPTG32506. Refer to Chapter 3.5.2 Connection of Display Unit and RIF for wiring.

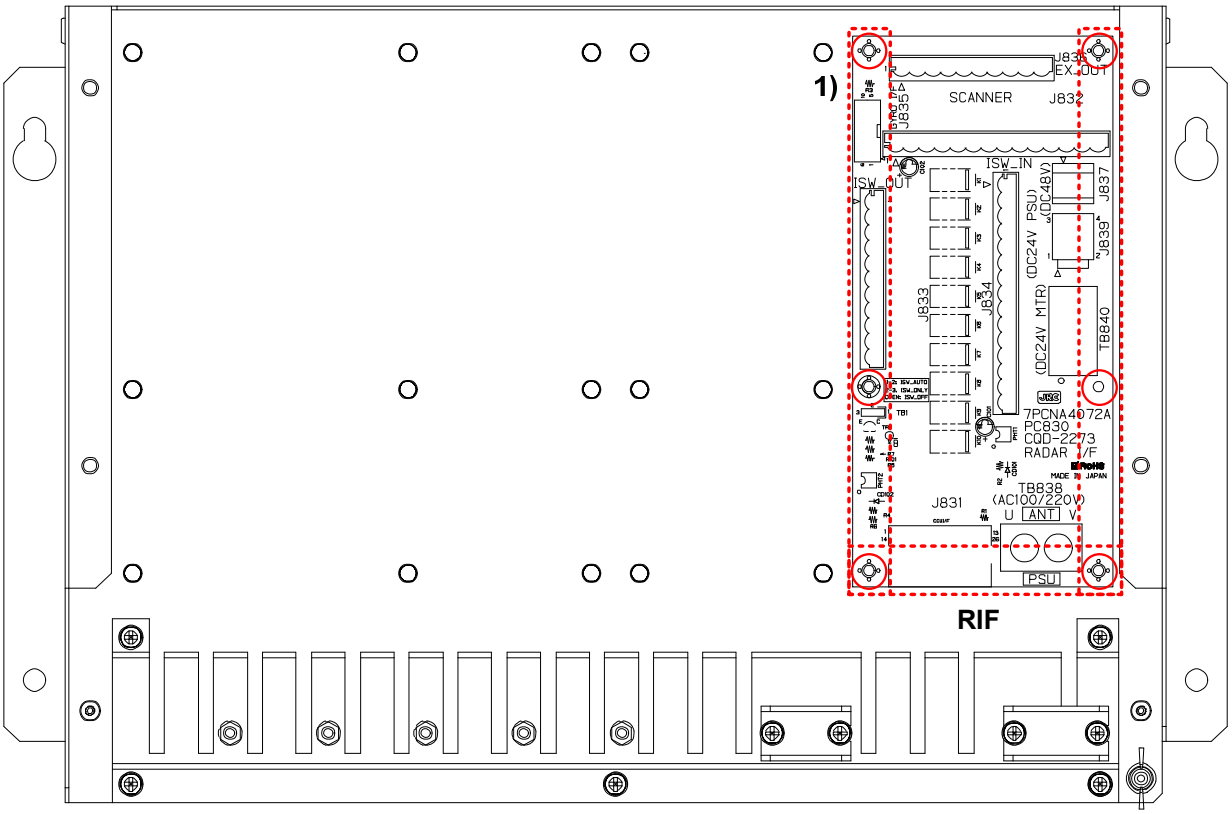

3.5.1.4 **Installation of Gyro Interface Circuit (GIF)**

1) If there is the SLC(Left), W82:FF12-10N046XXA FFC cable(included in CMJ-554) should connect to the J8115 connector on the SLC SS side. And lock the FFC connector.

⚠ Note insufficient insertion and inserted diagonally.

Make sure that the FFC connector is locked.

2) Install the GIF(PC820) to the position shown in the figure below using the 6 pan head screws (BSNC03006B) from MPTG32506.

3) Connect the W82: FF12-10N046XXA FFC cable to the J821 connector on GIF. And lock the FFC connector.

⚠ Note insufficient insertion and inserted diagonally.

Make sure that the FFC connector is locked.

4) Connect the W81: CP010391-20 ribbon cable(included in CMJ-554) to the J822 connector on the GIF. And connect the W81 cable another end to the J835 connector on the RIF(PC830).

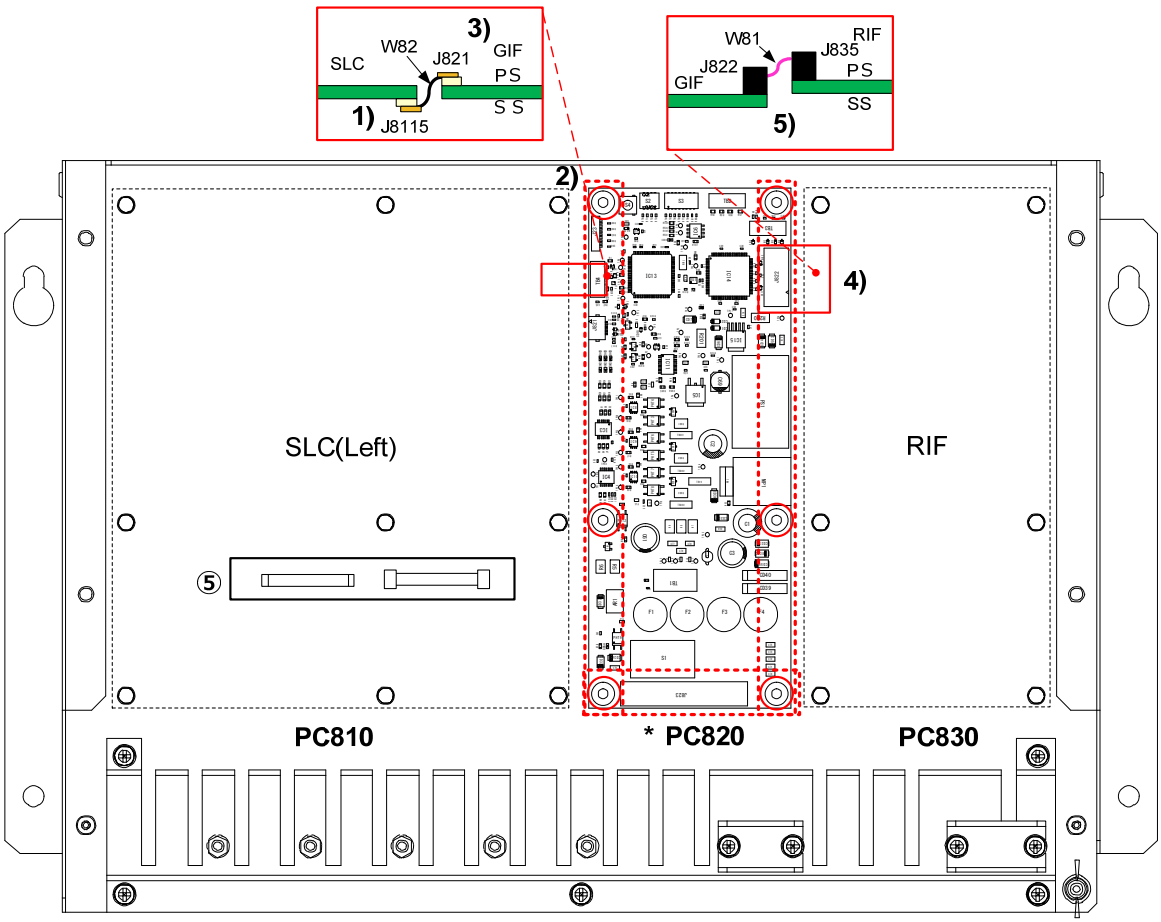

3.5.1.5 **Installation of JB**

1) Tighten the 2 screws(M5x10SUS + Spring washer + Washer) to the frame loosely.

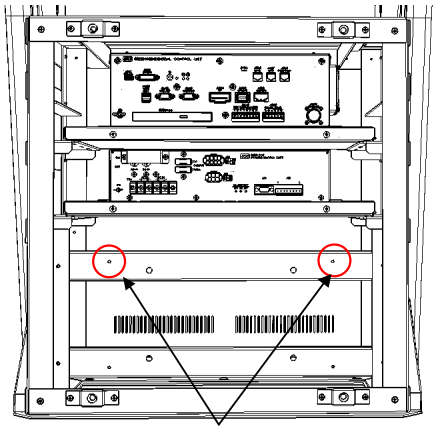

Tighten the 2 screw loosely
M5x10SUS + SPringwasher + Washer

2) Hook the JB to the frame with the 2 screws.

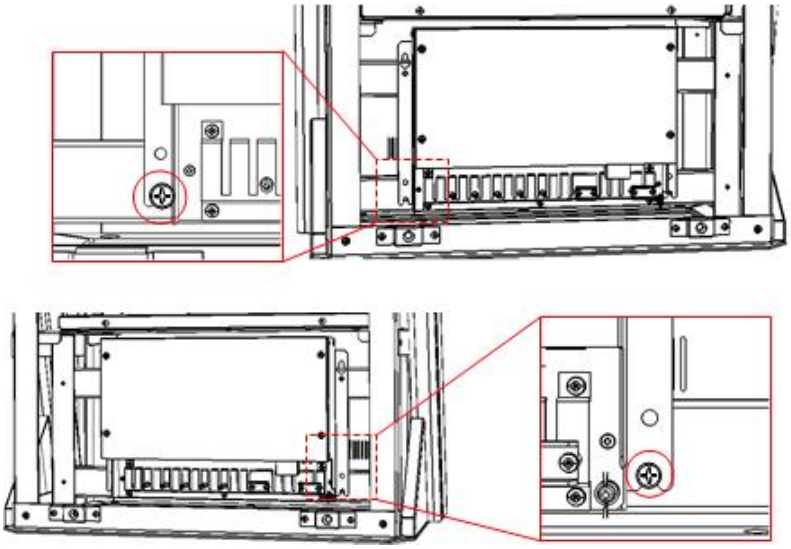

3) Install the JB to the frame.

Tighten the 4 screw
M5x10SUS + Springwasher + Washer

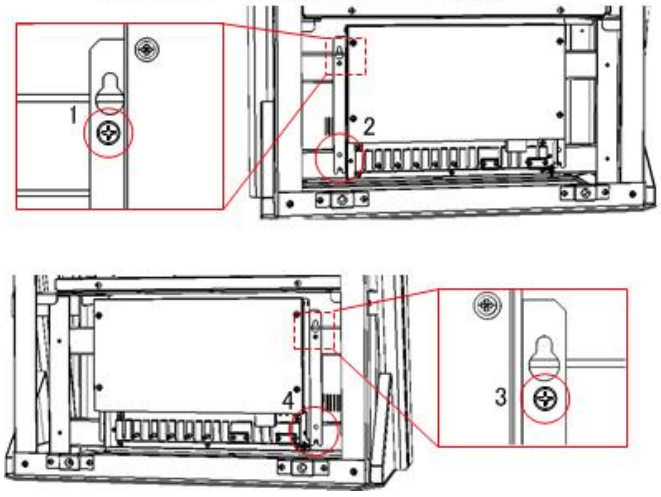

4) Connect the FG terminal of the JB to the frame.

Y terminal : Frame side

Round terminal : JB FG side

W92:H-7ZCNA4216

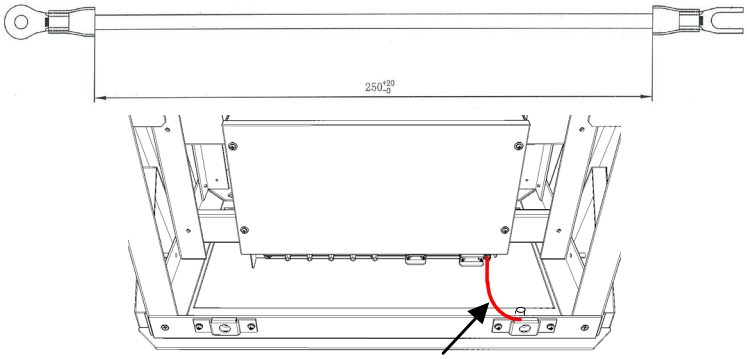

Connect W92

5) If the SLC is installed to the JB, connect the 24VDC power supply line to the reference to the figure below.

■If the coil and connection terminal is attached to the JB.

There is a need to supply 24VDC through the coil. Please be wired to the following procedure.

Step1: Crimp the 2 connection terminals (blue) to the DC power cable(24VDC line and GND). Connection terminals have been attached to the JB. If the second SLC is installed to the JB, crimp the connection terminal as well.

Connection terminal(blue)

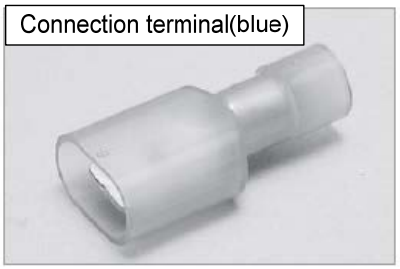

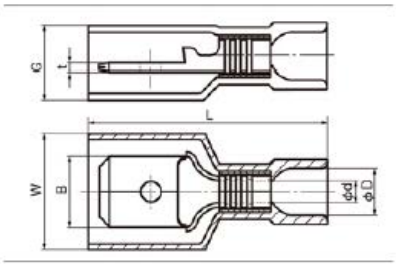

PART NUMBER	DIMENSIONS mm								WIRE RANGE		TOOL No.	
									STRANDED	AWG	HAND TOOL No.	
	B	W	t	L	ϕd	ϕD	G	H	mm^2		TOOL BODY No.	DIES No.
TMEDN 630820-MA	6.35	10.3	0.8	22.0	2.55	4.5	6.4	10.0	2.0	14.0	NH12 NH32	
											NA10 NA3	N10 12 N3 12

Step2: Connect the connection terminal (crimped in step1) to the JB side connection terminal(red).

●The polarity of the DC power cable of SLC

+: white

- : black

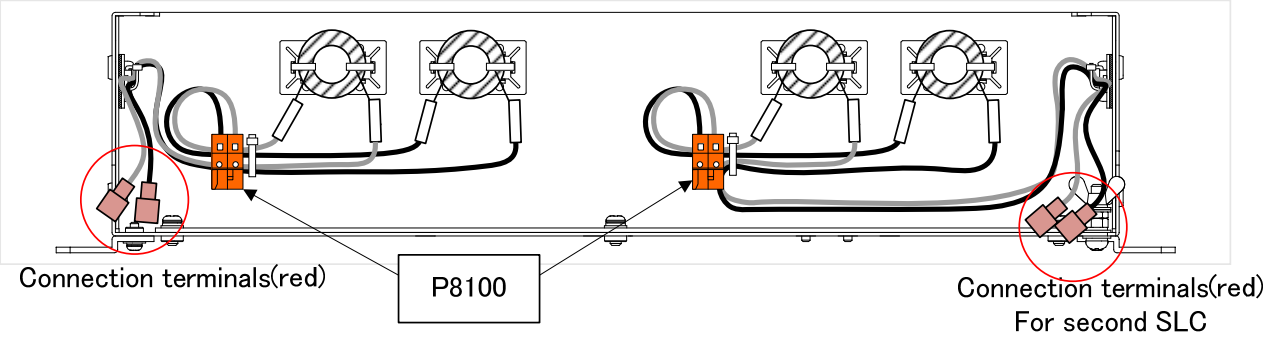

Step3: Please fix the DC power cable of SLC to the JB using the cable tie.

■If the coil and connection terminal are included with the JB

Please connect the DC24V supply line directly to the P8100.

●Terminal Assign of P8100

Terminal number 1：+24VDC (labeled with “24V”)

Terminal number 2：GND (labeled with “GND”)

3.5.2 Connection of Display Unit and RIF

3.5.2.1 **Connection for standalone type**

If the RIF is incorporated JB, connect the RIF and CCU. Either a cable is arranged by the scanner unit.

- CML-836-AC
- CML-836-DC

●When CML-836-AC has been arranged

W841：H-7ZCNA4164(included in CML-836-AC)

Connect the J831 connector on the RIF to the J4203 on CCU by W841: H-7ZCNA4164.

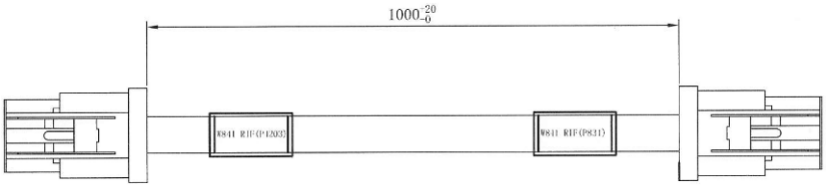

Wire the cable to pass through the nylon clip No.5 and 6.

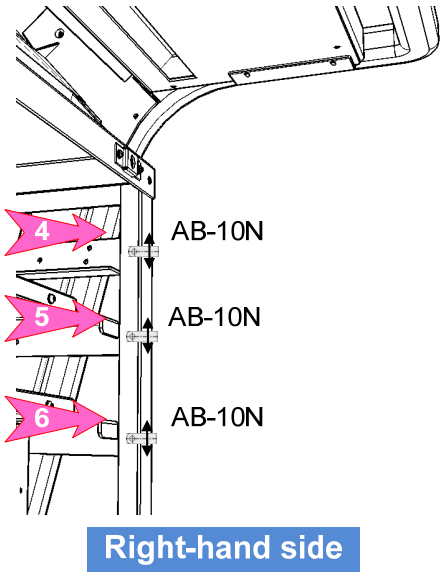

W851：7ZCNA4158(included in CML-836-AC)

・Connect the W851 cable connector labeled “P50” to the J50 connector on the PSU.

・Connect the cable labeled “P837” in the W851 cable to the J837 connector on the RIF.

・Connect the terminal labeled “U” in the W851 to the TB838 U terminal on the RIF.

・Connect the terminal labeled “V” in the W851 to the TB838 V terminal on the RIF.

・Co-tighten the terminal labeled “FG” in the W851 cable and FG connection screw on the RIF.

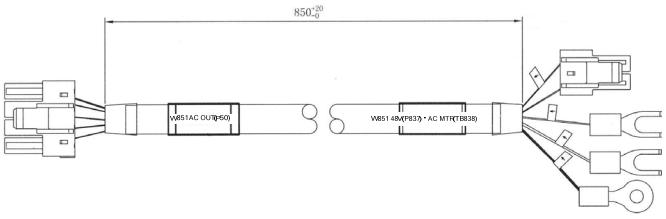

Wire the cable to pass through the nylon clip No.6.

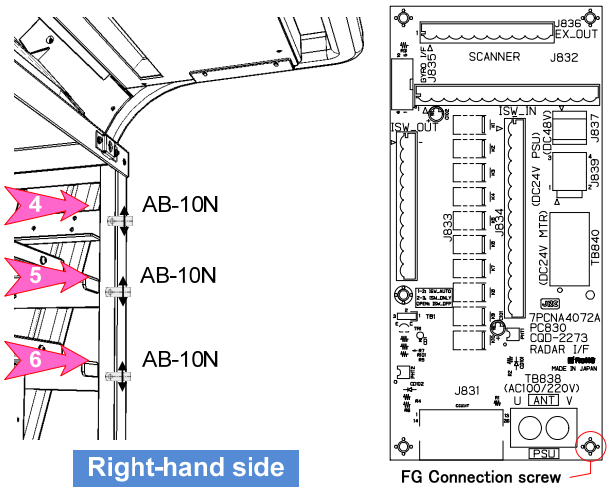

●When CML-836-DC has been arranged

W841：H-7ZCNA4164(included in CML-836-DC)

Connect the J831 connector on the RIF to the J4203 on CCU by W841: H-7ZCNA4164.

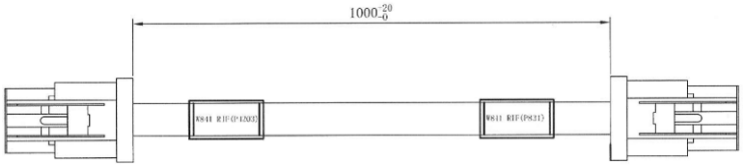

Wire the cable to pass through the nylon clip No.5 and 6.