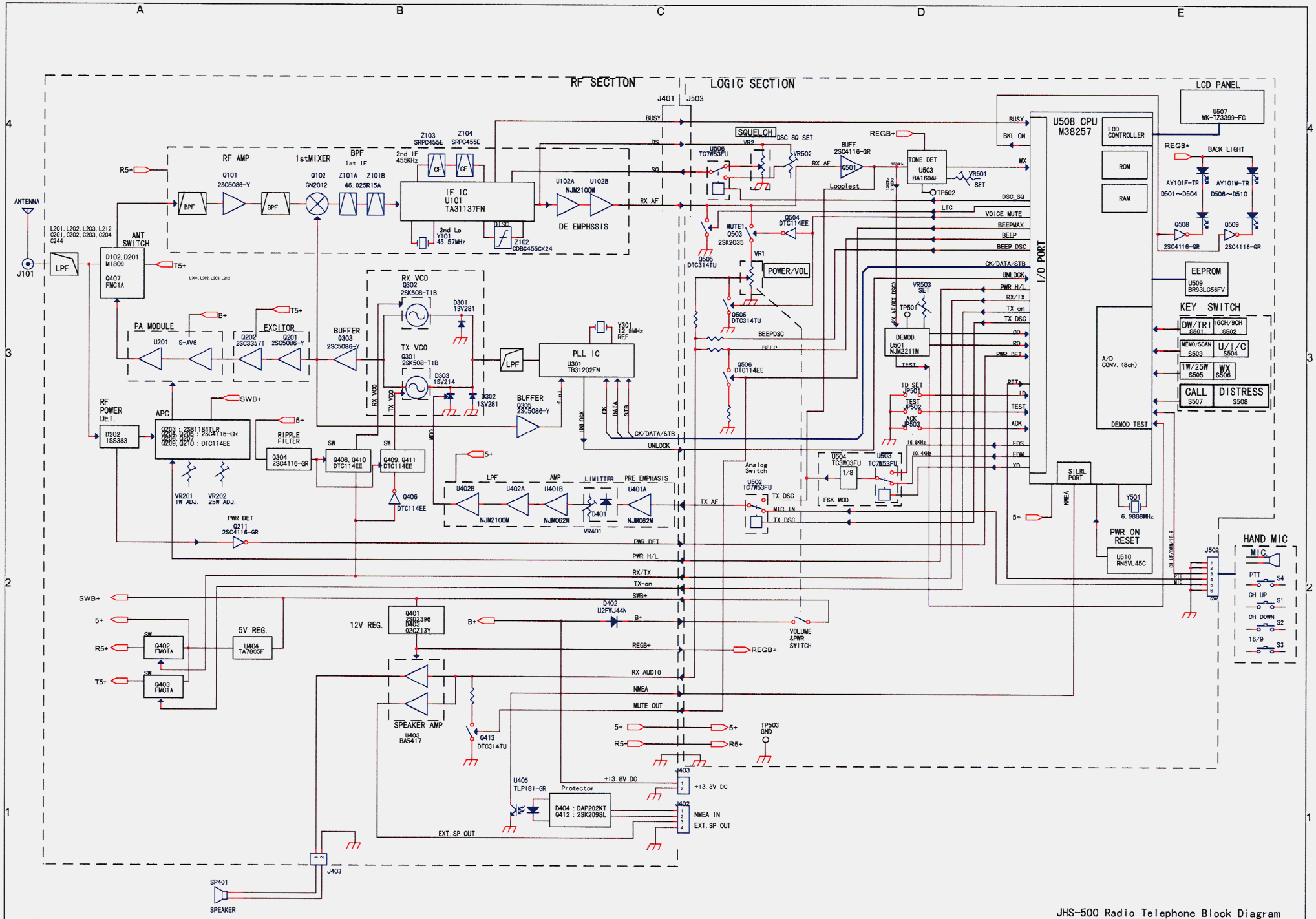
RF SECTION
LOGIC SECTION
LCD PANEL
U507 WK-TZ3399-FG
U508 CPU M38257
LCD CONTROLLER
ROM
RAM
I/O PORT
EEPROM U509 BR93LC56FV
KEY SWITCH
DW/TRI S501
16CH/9CH S502
MEMO/SCAN S503
U/I/C S504
1W/25W S505
WX S506
CALL S507
DISTRESS S508
A/D CONV. (8ch)
DEMOD TEST
SILRL PORT
PWR ON RESET
U510 RN5VL45C
HAND MIC
MIC.
PTT S4
CH UP S1
CH DOWN S2
16/9 S3
J502
J401
J503
ANTENNA
J101
LPF
ANT SWITCH
D102, D201 M1809
Q407 FMC1A
RF AMP
Q101 2SC5086-Y
1stMIXER
Q102 GN2012
BPF
1st IF
Z101A 46.025
Z101B 15A
2nd IF 455KHz
Z103 SRPC455E
Z104 SRPC455E
IF IC U101 TA31137FN
2nd Lo Y101 45.57MHz
DISC
Z102 CDBC455CX24
U102A U102B NJM2100M
DE EMPHSSIS
SQUELCH
DSC SQ SET
VR2
VR502
U506 TC7W53FU
BUFF 2SC4116-GR
Q501
LoopTest
TONE DET. U503 BA1604F
VR501 SET
TP502
REGB+
BACK LIGHT
AY101F-TR D501~D504
AY101W-TR D506~D510
Q508 2SC4116-GR
Q509 2SC4116-GR
MUTE1 Q503 2SK2035
Q504 DTC114EE
Q505 DTC314TU
VR1
POWER/VOL
Q505 DTC314TU
Q506 DTC114EE
VR503 SET
TP501
DEMOD. U501 NJM2211M
ID-SET JP501
TEST JP502
ACK JP503
16.8KHz
10.4KHz
U504 TC3W03FU
U503 TC7W53FU
1/8
FSK MOD
Analog Switch
U502 TC7W53FU
TX DSC
MIC IN
TX AF
PA MODULE
U201 S-AV6
EXCITOR
Q202 2SC3357T
Q201 2SC5086-Y
BUFFER Q303 2SC5086-Y
RX VCO Q302 2SK508-T1B
TX VCO Q301 2SK508-T1B
D301 1SV281
D303 1SV214
D302 1SV281
PLL IC U301 TB31202FN
Y301 12.8MHz REF
BUFFER Q305 2SC5086-Y
RF POWER DET.
D202 1SS383
APC
Q203 : 2SB1184TLR
Q204, Q205 : 2SC4116-GR
Q206, Q207
Q209, Q210 : DTC114EE
VR201 1W ADJ.
VR202 25W ADJ.
RIPPLE FILTER
Q304 2SC4116-GR
Q408, Q410 DTC114EE
Q409, Q411 DTC114EE
Q406 DTC114EE
LPF
AMP
LIMITTER
PRE EMPHASIS
U402B NJM2100M
U402A
U401B NJM062M
D401
VR401
U401A NJM062M
PWR DET Q211 2SC4116-GR
PWR DET
PWR H/L
RX/TX
TX-on
SWB+
5V REG.
U404 TA7805F
Q402 FMC1A
Q403 FMC1A
12V REG.
Q401 2SD2396
D403 02CZ13Y
D402 U2FWJ44N
VOLUME &PWR SWITCH
RX AUDIO
NMEA
MUTE OUT
SPEAKER AMP
U403 BA5417
Q413 DTC314TU
TP503 GND
U405 TLP181-GR
Protector
D404 : DAP202KT
Q412 : 2SK2098L
+13.8V DC
NMEA IN
EXT. SP OUT
J403
SP401
SPEAKER
JHS-500 Radio Telephone Block Diagram