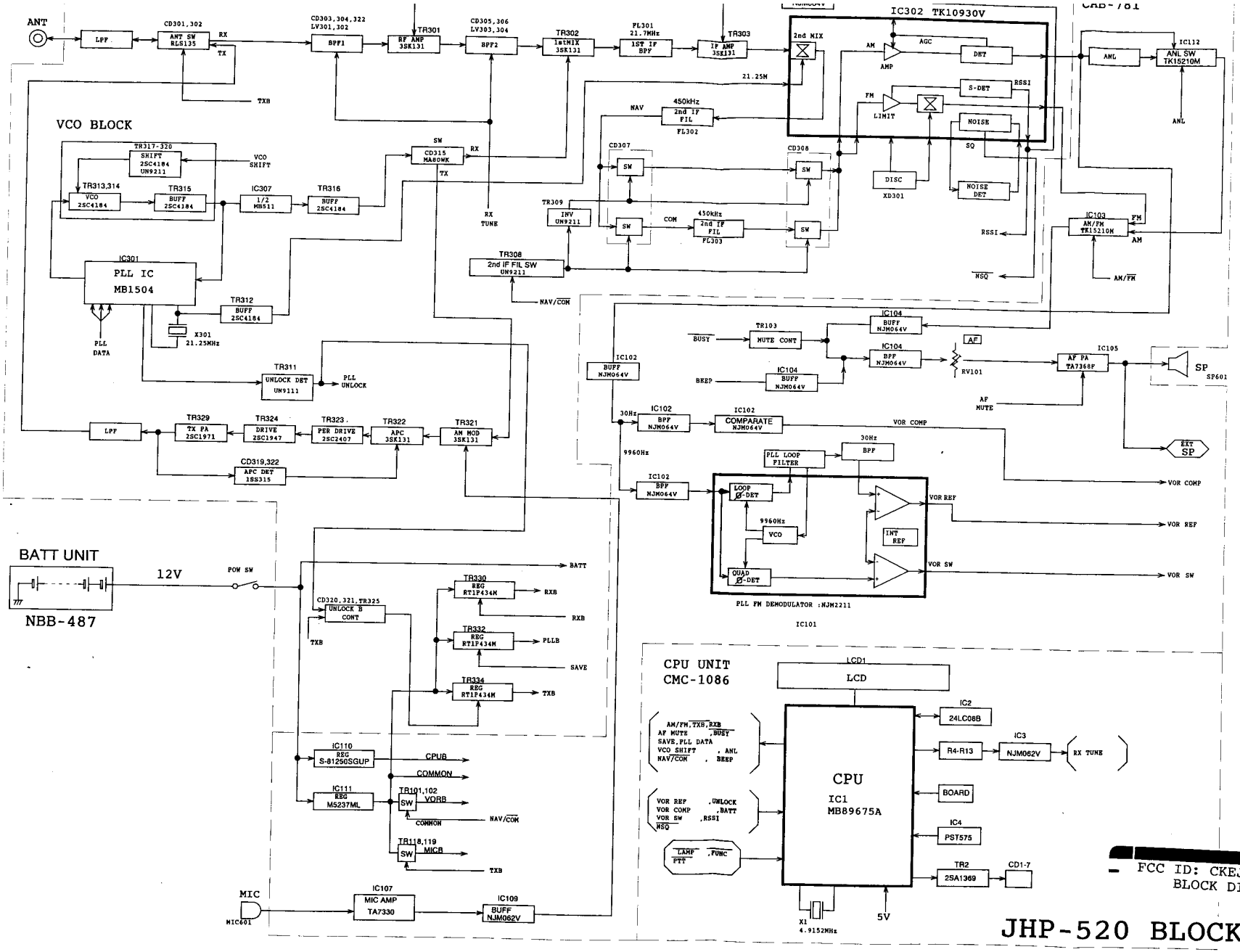

FCC ID: CKEJHP-520
BLOCK DIAGRAM

JHP-520 BLOCK DIAGRAM