EXHIBIT VIII

SCHEMATICS Part 1 of 2
BTS-7010

BTS-7010
MULTI-CHANNEL BOOSTER

DRAWING LIST (SUBASSEMBLIES)

Bandpass Filter Assembly:

Block Diagram, Bandpass Filter Assembly 1139975

Interconnect, Bandpass Filter Assembly 1139973

The Bandpass Filter Assembly contains the following boards/modules:

Bandpass Filter Control Board 1114836

Bandpass Filter Module 1123338

Bandpass Filter Chassis:

Bandpass Filter Backplane Board 1128530

Downstream Transfer Switch Assembly:

Block Diagram, Downstream Transfer Switch Assembly 1136335

Interconnect, Downstream Transfer Switch Assembly 1121610

The Downstream Transfer Switch Assembly contains the following boards/modules:

Downstream Transfer Switch Control Board 1121614

Front Panel LED Board 1113710

SP4T Transfer Switch ..... (Part # 04-112E19)

Power Amplifier Assembly:

Interconnect, Power Amplifier Assembly.....1171358

The Power Amplifier Assembly contains the following boards/modules:

Manual Control Board.....1155954

Signal Cancellation Board.....1156445

Signal Correction Board.....1156444

Power Amplifier Board.....1165711

Correction Amplifier Board.....1165714

8 Section Bias Protection Board 1586-3109

Dual Output Power Supply (DC/DC Converter) Board.....ADC-DC380-1012

Power Supply Assembly:

Block Diagram, Power Supply Assembly.....1151455

Interconnect, Power Supply Assembly.....1113841

The Power Supply Assembly contains the following boards/modules:

Power Factor Correction (PFC) Board 1112214

Astec MP4/2L/1L switiching Power Supply..... (see MP4 specification sheets)

Front Panel LED Board.....1113710

Power Supply/Power Amplifier Chassis:

Power Supply/Power Amplifier Backplane Board 1121681

Upconverter Assembly:

Block Diagram, Upconverter Assembly 1175458

Interconnect, Upconverter Assembly.....1152963

The Upconverter contains the following boards/modules:

Block Upconverter Board (2.5 – 2.7 GHz).....1138753

Multiplexer Assembly:

Blcok Diagram, Multiplexer Assembly.....1090775

The Multiplexer Assembly contains the following boards/modules:

Multiplexer Board 1113588

Upstream/Downstream Switch Assembly:

Block Diagram, Upstream/Downstream Switch Assembly 1144128

Interconect, Upstream/Downstream Switch Assembly..... 1126654

The Upstream/Downstream Switch Assembly contains the following boards/modules:

Upstream/Downstream Control Board 1125362

Dual SP4T RF Switch Board 1125367

Upper RF Signal Processing Chassis:

Upper RF Signal Processing Backplane Board..... 1149605

Lower RF Signal Processing Chassis:

Lower RF Signal Processing Backplane Board 1149606

10 MHz Frequency Reference Assembly:

Block Diagram, 10 MHz Frequency Reference Assembly 1129658

Interconect, 10 MHz Frequency Reference Assembly 1129669

The 10 MHz Frequency Reference Assembly contains the following boards/modules:

10 MHz Reference Board.....1136560

Front Panel LED Board.....1113710

TrueTime GPS model 87-664 87-664

10MHz Reference Generator Board 1519-3126

Downstream Controller Assembly:

The Downstream Controller Assembly contains the following boards/modules:

Downstream Controller Board 1132140

Automatic Back-up System (ABS) Controller Assembly:

The ABS Controller Assembly contains the following boards/modules:

ABS Controller Board 1132142

System Monitoring Assembly:

Block Diagram, System Monitoring Assembly 1156006

Interconect, System Monitoring Assembly 1156005

The System Monitoring Assembly contains the following boards/modules:

LCD Backplane Interface Board 1116295

Front Panel LED Board 1113710

Switch Board 1527-3406

Control Chassis:

Control Chassis Backplane Board 1119953

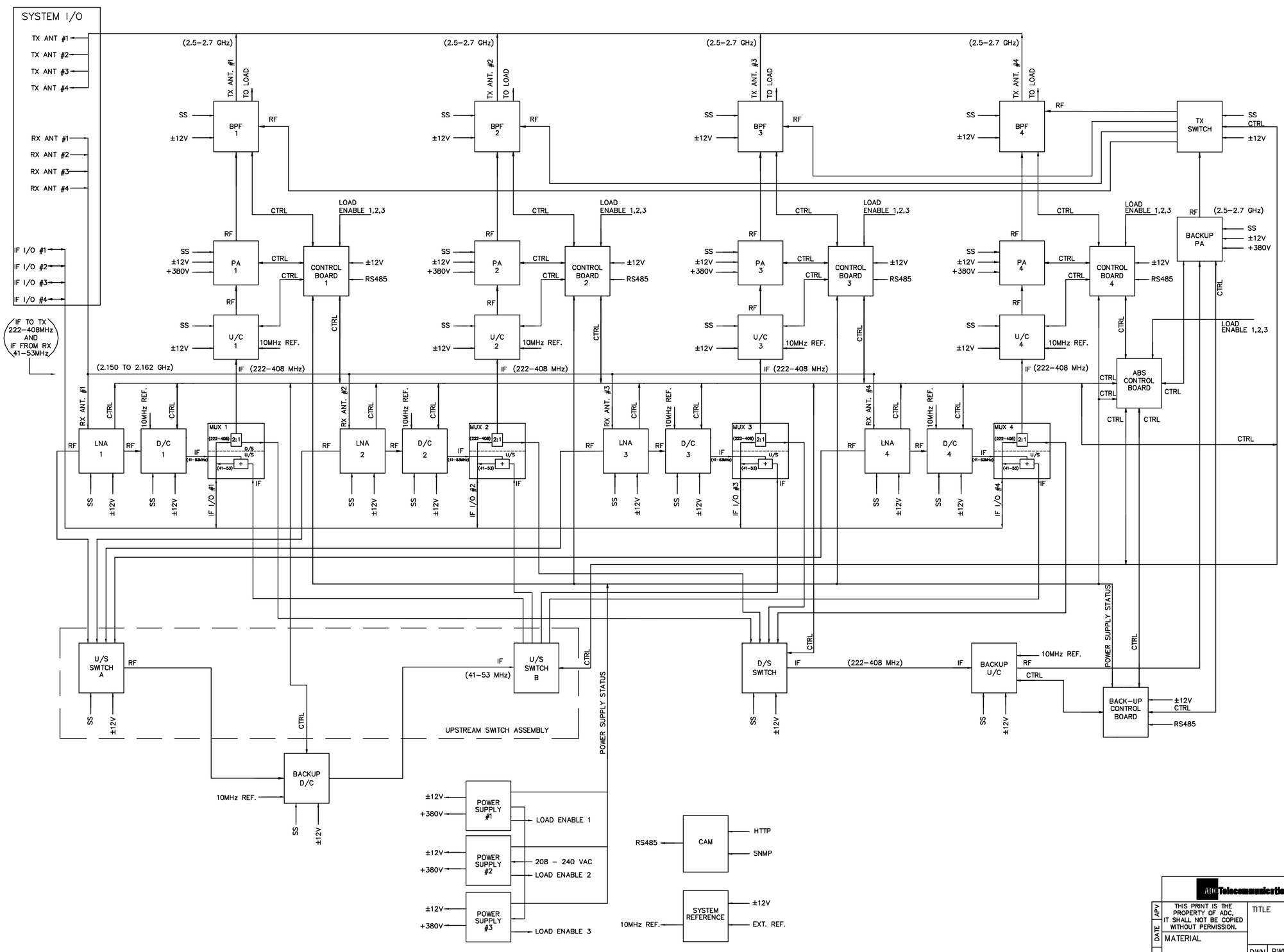

ADC Telecommunications

REV	ECO	DATE	APV

THIS PRINT IS THE PROPERTY OF ADC, IT SHALL NOT BE COPIED WITHOUT PERMISSION.

MATERIAL

FINISH

TITLE B/D: BWA2000, MMDS, D/S, MDS U/S

DWN	PWN	05/11/00	DWG. NO. 1111636
CHK	REH	7/14/00	REV A0
REL	JCM	7/14/00	D SCALE NONE SHEET 1 OF 1

BTS-7010
MULTI-CHANNEL BOOSTER

DRAWING LIST (SUBASSEMBLIES)

Bandpass Filter Assembly:

Block Diagram, Bandpass Filter Assembly 1139975

Interconnect, Bandpass Filter Assembly 1139973

The Bandpass Filter Assembly contains the following boards/modules:

Bandpass Filter Control Board 1114836

Bandpass Filter Module 1123338

Bandpass Filter Chassis:

Bandpass Filter Backplane Board 1128530

Downstream Transfer Switch Assembly:

Block Diagram, Downstream Transfer Switch Assembly 1136335

Interconnect, Downstream Transfer Switch Assembly 1121610

The Downstream Transfer Switch Assembly contains the following boards/modules:

Downstream Transfer Switch Control Board 1121614

Front Panel LED Board 1113710

SP4T Transfer Switch ..... (Part # 04-112E19)

Power Amplifier Assembly:

Interconnect, Power Amplifier Assembly 1171358

The Power Amplifier Assembly contains the following boards/modules:

Manual Control Board 1155954

Signal Cancellation Board 1156445

Signal Correction Board 1156444

Power Amplifier Board 1165711

Correction Amplifier Board 1165714

8 Section Bias Protection Board 1586-3109

Dual Output Power Supply (DC/DC Converter) Board ADC-DC380-1012

Power Supply Assembly:

Block Diagram, Power Supply Assembly 1151455

Interconnect, Power Supply Assembly 1113841

The Power Supply Assembly contains the following boards/modules:

Power Factor Correction (PFC) Board 1112214

Astec MP4/2L/1L switiching Power Supply ..... (see MP4 specification sheets)

Front Panel LED Board 1113710

Power Supply/Power Amplifier Chassis:

Power Supply/Power Amplifier Backplane Board 1121681

Upconverter Assembly:

Block Diagram, Upconverter Assembly 1175458

Interconnect, Upconverter Assembly 1152963

The Upconverter contains the following boards/modules:

Block Upconverter Board (2.5 – 2.7 GHz) 1138753

Multiplexer Assembly:

Blcok Diagram, Multiplexer Assembly.....1090775

The Multiplexer Assembly contains the following boards/modules:

Multiplexer Board 1113588

Upstream/Downstream Switch Assembly:

Block Diagram, Upstream/Downstream Switch Assembly 1144128

Interconect, Upstream/Downstream Switch Assembly..... 1126654

The Upstream/Downstream Switch Assembly contains the following boards/modules:

Upstream/Downstream Control Board 1125362

Dual SP4T RF Switch Board 1125367

Upper RF Signal Processing Chassis:

Upper RF Signal Processing Backplane Board..... 1149605

Lower RF Signal Processing Chassis:

Lower RF Signal Processing Backplane Board 1149606

10 MHz Frequency Reference Assembly:

Block Diagram, 10 MHz Frequency Reference Assembly 1129658

Interconect, 10 MHz Frequency Reference Assembly 1129669

The 10 MHz Frequency Reference Assembly contains the following boards/modules:

10 MHz Reference Board.....1136560

Front Panel LED Board.....1113710

TrueTime GPS model 87-664 87-664

10MHz Reference Generator Board 1519-3126

Downstream Controller Assembly:

The Downstream Controller Assembly contains the following boards/modules:

Downstream Controller Board 1132140

Automatic Back-up System (ABS) Controller Assembly:

The ABS Controller Assembly contains the following boards/modules:

ABS Controller Board 1132142

System Monitoring Assembly:

Block Diagram, System Monitoring Assembly 1156006

Interconect, System Monitoring Assembly 1156005

The System Monitoring Assembly contains the following boards/modules:

LCD Backplane Interface Board 1116295

Front Panel LED Board 1113710

Switch Board 1527-3406

Control Chassis:

Control Chassis Backplane Board 1119953

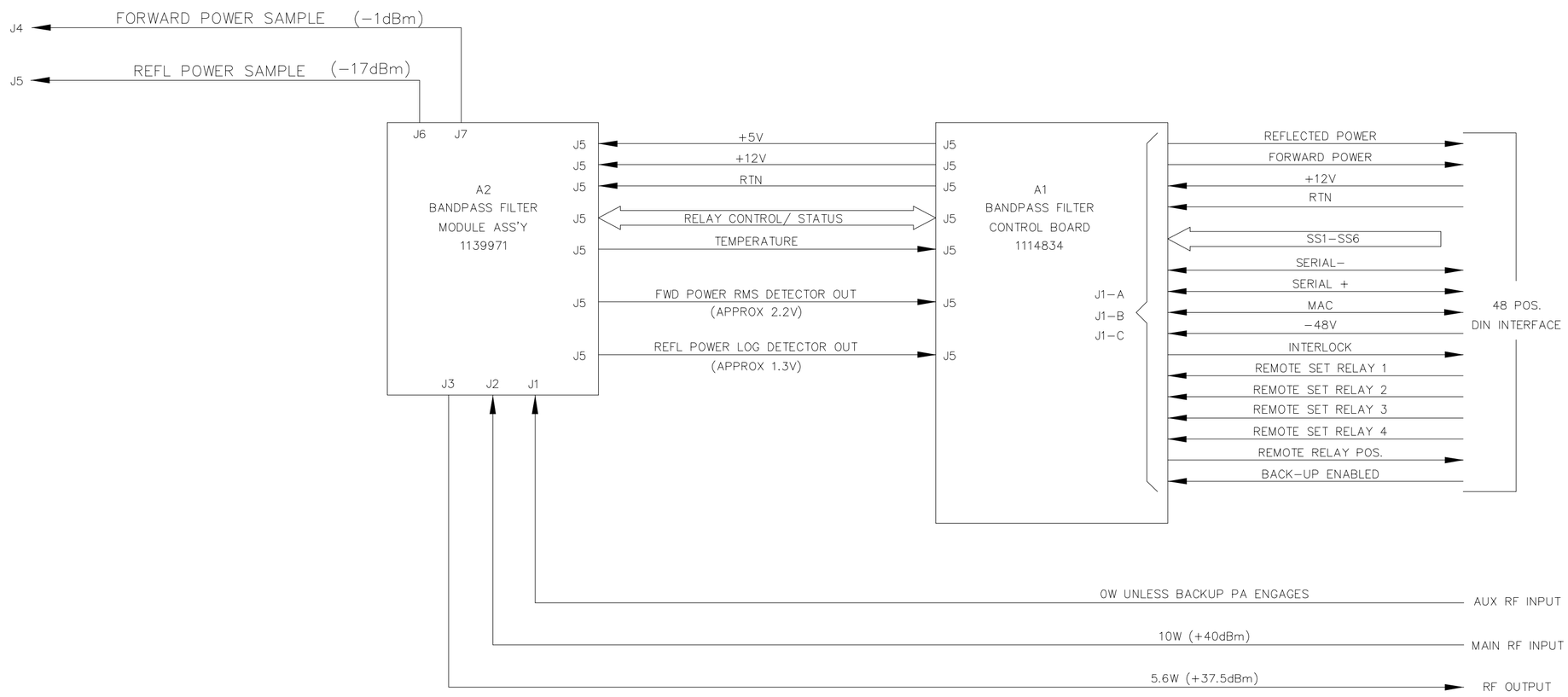

NOTE: POWER LEVELS ARE FOR A TYPICAL
10W MULTICARRIER SYSTEM.

ADC Telecommunications

REV	ECO	DATE	APV

THIS PRINT IS THE PROPERTY OF ADC, IT SHALL NOT BE COPIED WITHOUT PERMISSION.

MATERIAL ----

FINISH ----

TITLE B/D, BANDPASS FILTER ASS'Y

DWN	RJB	11/9/00
CHK	REH	1/12/01
REL	PWK	1/16/01

DWG. NO. 1139975 REV A0

C SCALE --- SHEET 1 OF 1

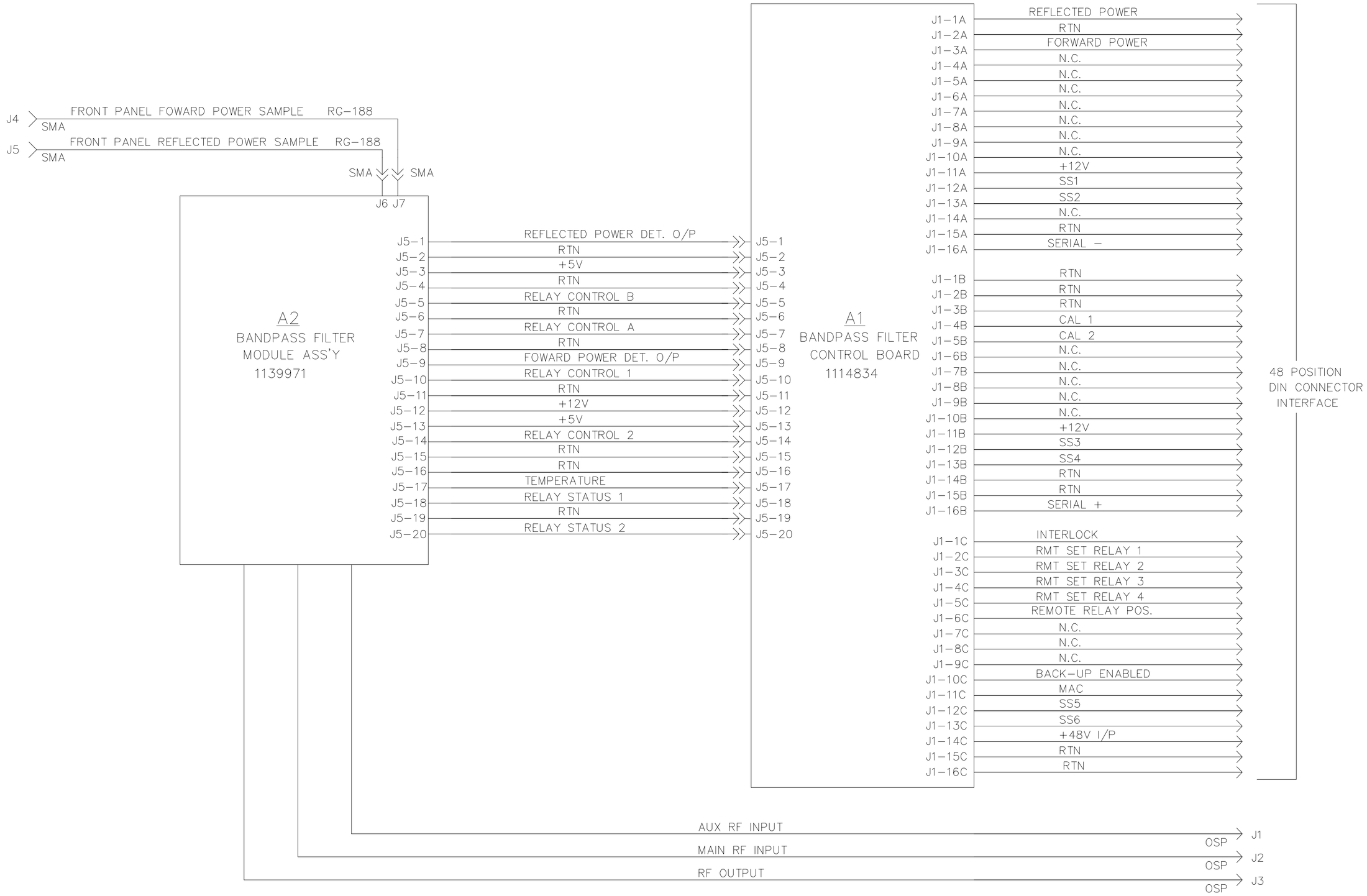

ADC Telecommunications

REV	ECO	DATE	APV

THIS PRINT IS THE PROPERTY OF ADC, IT SHALL NOT BE COPIED WITHOUT PERMISSION.

MATERIAL ---

FINISH ---

TITLE I/C, BANDPASS FILTER ASS'Y

DWN	RJB	11/8/00	DWG. NO. 1139973	REV A0
CHK	REH	1/12/01		
REL	PWK	1/16/01	C SCALE ---	SHEET 1 OF 1

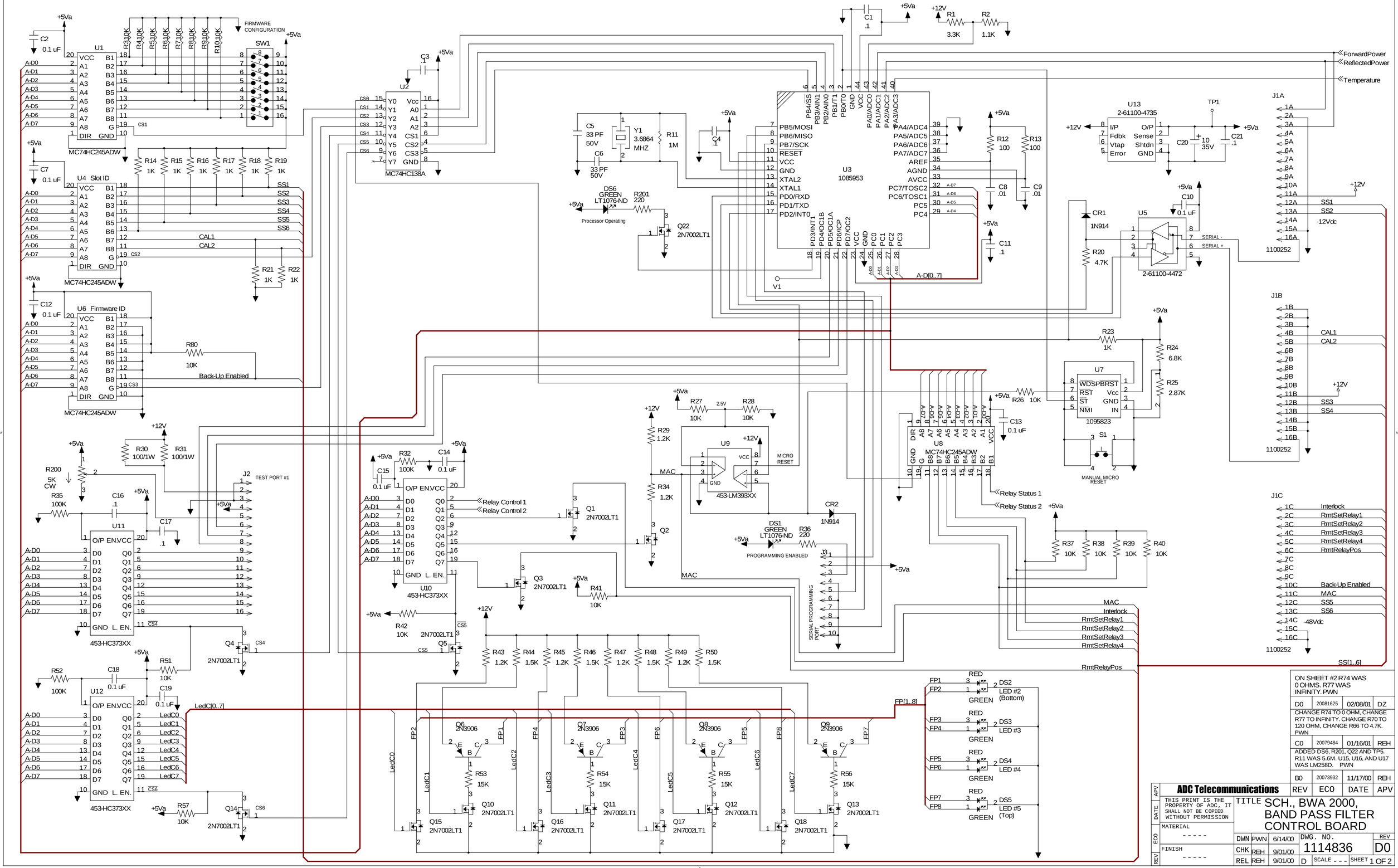
FIRMWARE CONFIGURATION
SW1
U1
MC74HC245ADW
U2
MC74HC138A
U3
1085953
U4 Slot ID
U6 Firmware ID
U7
1095823
U8
MC74HC245ADW
U9
453-LM393XX
U10
453-HC373XX
U11
453-HC373XX
U12
453-HC373XX
U13
2-61100-4735
U5
2-61100-4472
J1A
1100252
J1B
1100252
J1C
1100252
J2
TEST PORT #1
J3
SERIAL PROGRAMMING PORT
ForwardPower
ReflectedPower
Temperature
Relay Control 1
Relay Control 2
Relay Status 1
Relay Status 2
MANUAL MICRO RESET
MICRO RESET
PROGRAMMING ENABLED
Processor Operating
Back-Up Enabled
A-D[0..7]
LedC[0..7]
FP[1..8]
SS[1..6]
-12Vdc
-48Vdc
ON SHEET #2 R74 WAS 0 OHMS. R77 WAS INFINITY. PWN
D0 20081625 02/08/01 DZ
CHANGE R74 TO 0 OHM, CHANGE R77 TO INFINITY. CHANGE R70 TO 120 OHM, CHANGE R66 TO 4.7K. PWN
C0 20079484 01/16/01 REH
ADDED DS6, R201, Q22 AND TP5. R11 WAS 5.6M. U15, U16, AND U17 WAS LM258D. PWN
B0 20073932 11/17/00 REH
ADC Telecommunications
REV ECO DATE APV
THIS PRINT IS THE PROPERTY OF ADC, IT SHALL NOT BE COPIED WITHOUT PERMISSION
TITLE SCH., BWA 2000, BAND PASS FILTER CONTROL BOARD
MATERIAL -----
FINISH -----
DWN PWN 6/14/00
CHK REH 9/01/00
REL REH 9/01/00
DWG. NO. 1114836
REV D0
SCALE ---
SHEET 1 OF 2

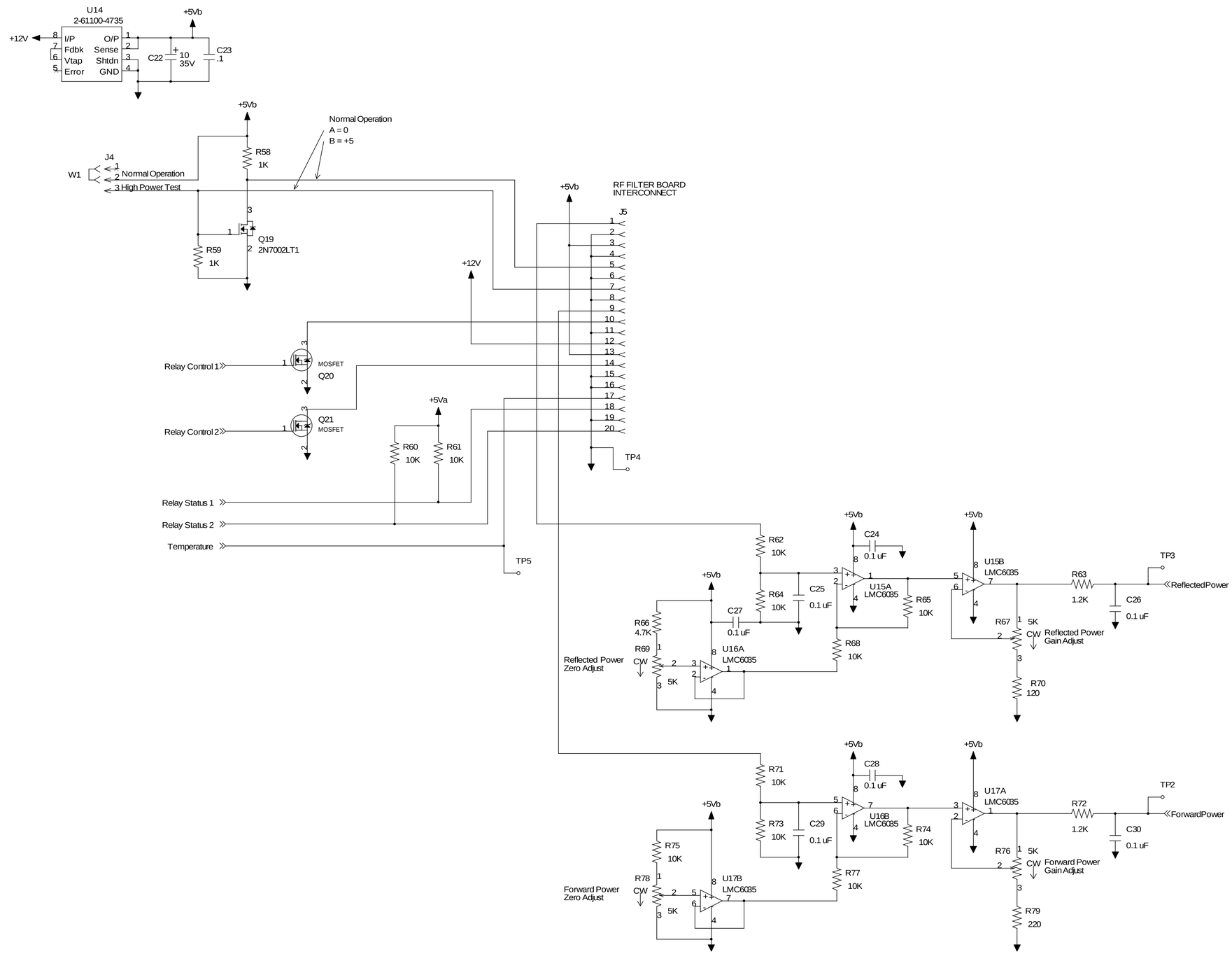

Circuit Description:
This board controls a high power two to one RF relay and monitors the forward and reflected power of a bandpass filter asse mbly.
J5 relay board. The latching relay is provided +12 Vdc thro ugh pin 12 of J5. When pin 10 is pulled to ground, the relay should switch to position one. In this position the RF signal p ath is from the main input path to the RF filter then through sample couplers then on to the output. If the relay changes position, the relay status indicator will change on pin 18 of J5;
pin 20 of J5 is for another relay option where two pos ition indicators are provided.
The second relay position is similar to position #1 except t hat RF of the Alternate Input is routed to the RF filter to the couplers then on to the output.
In both cases the relay must be provided DC common to cause the swi tch to change position.
After switching the relay will not draw current from t he +12 Volt line.
The relay control components are wired such that if the Relay Cont rol line is logic high, the corresponding FET transistor is enabled causing current to flow t hrough the relay coil.

The forward and reflected power signals are transferred to th is control board through J5.
Since both signals may have a DC value greater than zero at zero power, the signal is first ground referenced by subtracting the DC voltage that is set on the Zero Adjust potentiometers.
The signal is then amplified with a variable gain am plifier before being monitored by the microcontroller and made availa ble to the back plane board.

J4 is used to control a RF switch on the RF relay board. This jumper is placed in the High Pow er Test position only if the customer is operating the BPF at abnormally high RF levels.
This relay shunts signal away from a power detecto r to prevent component damage.

The Micro Access and Control (MAC) line is used to indicate current device status.
If this device is not installed or it is not powered, pin 11C of Jx on the back plane is about ground potential. If this device is installed and operating properl y this control line is held at about +12 Vdc through a 1.2 Kohm resistor. If a fault needs to be reported, two 1.20 K ohm resistors are used to set the MAC line at about +6 Vdc.
If the system controller needs to reset this device, it will hold the MAC line (pin 11C of J1) at about 0.0 Vdc.

U3 is the serial programmable Atmel microcontroller. The controller operates at 3.6864 MHz.

U7 is a watchdog timer IC that monitors PB0 of the micro. If the chip select address line does not change state after about 2 seconds, the reset line (pin 7) is sent low otherwise this li ne is held at +5 Vdc.

J3 is the programming port used to install the micro's f irmware.
J3 pin 5 is used by the serial programmer to hold the microco ntroller in reset.
If J3 pin 5 is low or the watchdog reset line is low, or the MAC line is held low, the micro controller is reset by pin 7 of U9.

U5 is the serial RS-485 transceiver IC. Pin 2 is used for data direction.
During a microcontroller reset, this part is set to receive mode. During normal operation, the microcontroller set this devices data flow direc tion.

U2 is used for device select. This part is used by the microcontroller to selectively communicate with U8, U1, U4, U6, U10, U11, or U12.

U8 is used for digital input signals. This part is used to monitor the relay status and the remote control lines of J1.

U1 is used for digital input signals. This part is used to the firmw are configuration DIP switch. This switch is used to implement different features of the fir mware.
Currently, position 1 indicates a 5 watt system, switch 2 is for a 10 watt sys tem, and switch 3 is used to indicate a 20 watt s ystem.

U4 is used for digital input signals. This part is used to the slot ID pins of J2.
The programming of these lines on the back plane board m ay be used by the firmware to set the device SCADA address.

U6 is used for digital input signals. This part is used to specify the desire fi rmware operation.
It is intended t hat all BWA devices operate using the same firmware. By monitoring these lines, th e firmware can determine which type of board it is controlling.
The back-up enabled line is used to tell the module that the back-up transmitter is operating.

U10 is used for digital output signals. This part is used to control the rela y circuits, Interlock signal, relay position indicator, an d MAC fault notification FET.

U11 is a digital output buffer that could be used to drive a display.

ADC Telecommunications		REV	ECO	DATE	APV
THIS PRINT IS THE PROPERTY OF ADC, IT SHALL NOT BE COPIED WITHOUT PERMISSION	TITLE SCH., BWA 2000 BAND PASS FILTER CONTROL BOARD				
MATERIAL -----	DWN PWN 6/14/00	DWG. NO. 1114836		REV D0	
FINISH -----	CHK REH 9/01/00				
	REL REH 9/01/00	D	SCALE - - -	SHEET 2 OF 2	

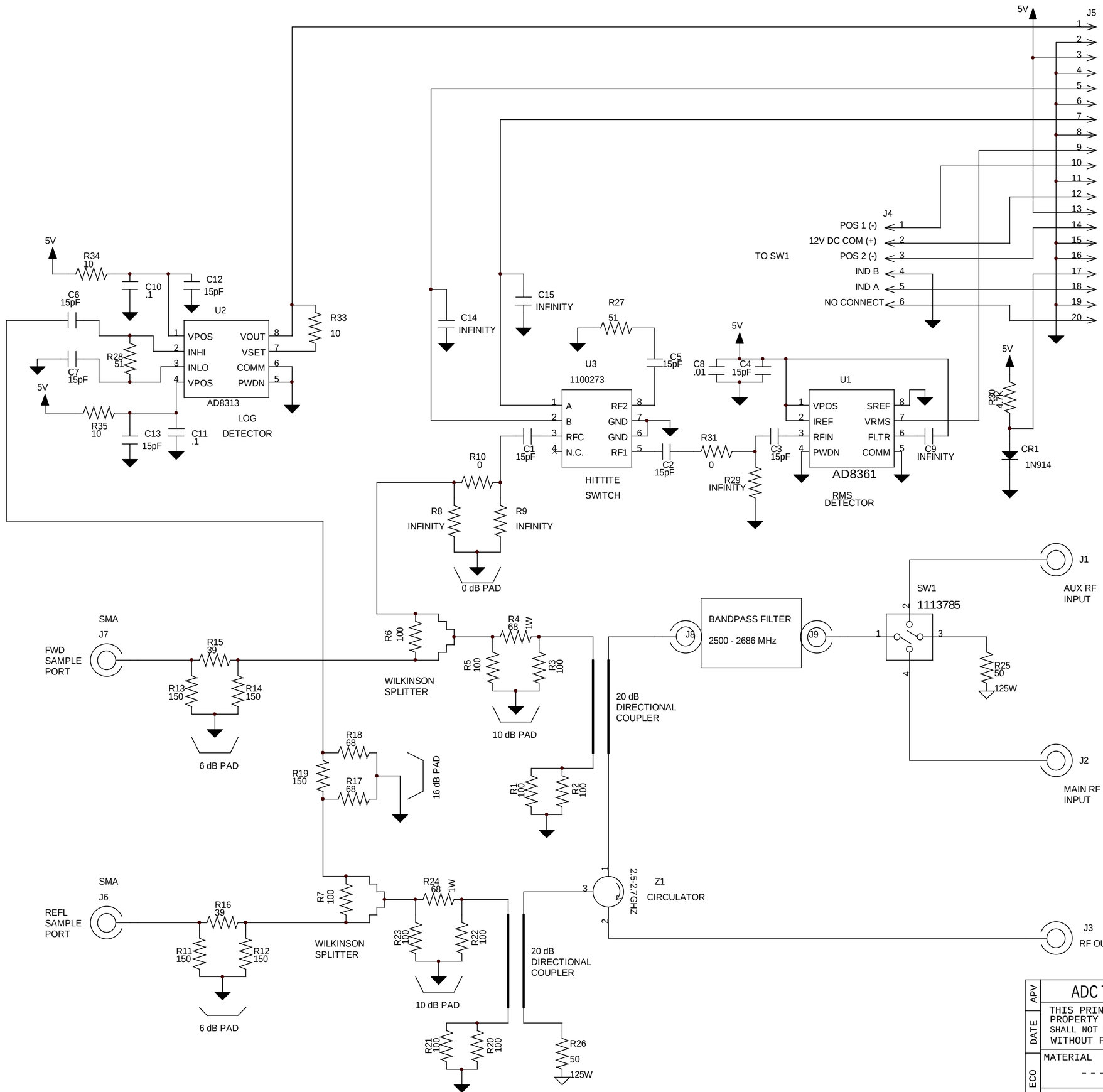

BWA 2000 BANDPASS FILTERMODULE
CIRCUIT DESCRIPTION

The function of the BWA 2000 bandpass filter module is to select between the main RF input and the auxillary RF input, filter the signal to be transmitted, measure both forward and reflected power levels, and then pass the signal on to the antenna. The basic circuit blocks are shown in the following diagram.

The RF switch selects either the main RF input (from the corresponding power amplifier) or the auxillary RF input (from the backup power amplifier) and passes the signal on to the filter. The unselected signal is terminated with a 50 ohm load. The filter is a six pole bandpass with a passband from 2500 to 2686 MHz and insertion loss of about 1.5 dB. It passes the desired signal while attenuating unwanted harmonics and spurious frequencies.

A small portion of the filtered signal is tapped off by the directional coupler and is then split into two parts: the forward power sample port and the forward power measuring circuit consisting of a rms detector and a Hittite switch (for use only during very high level testing (100 W) to protect the detector). Most of the filtered signal passes on to the circulator which in turn passes the final signal to the output port and the antenna. Any reflected power from antenna mismatch is diverted by the circulator to the reflected power sample port and the reflected power measuring circuit consisting of a log detector. Both types of detectors convert the incoming RF power to an output voltage that is sent to the control board outside the RF shielding module through the 20 pin filter plate connector mounted to the module.

ADDED C12- C15. R31 WAS L1. CHANGED PT. NO. FOR Z1. ADDED DESCR'TIVE TEXT AT U1,U2 & U3. RJB

REV	ECO	DATE	APV
A0	20075621	12/1/00	DEZ

ADC Telecommunications

THIS PRINT IS THE PROPERTY OF ADC, IT SHALL NOT BE COPIED WITHOUT PERMISSION

MATERIAL -----

FINISH -----

TITLE SCH BANDPASS FILTER BWA 2000

DWN	CAS	9/5/00	DWG. NO. 1123338	REV A0
CHK	DEZ	12/1/00		
REL	DEZ	12/1/00	C SCALE ---	SHEET 1 OF 1

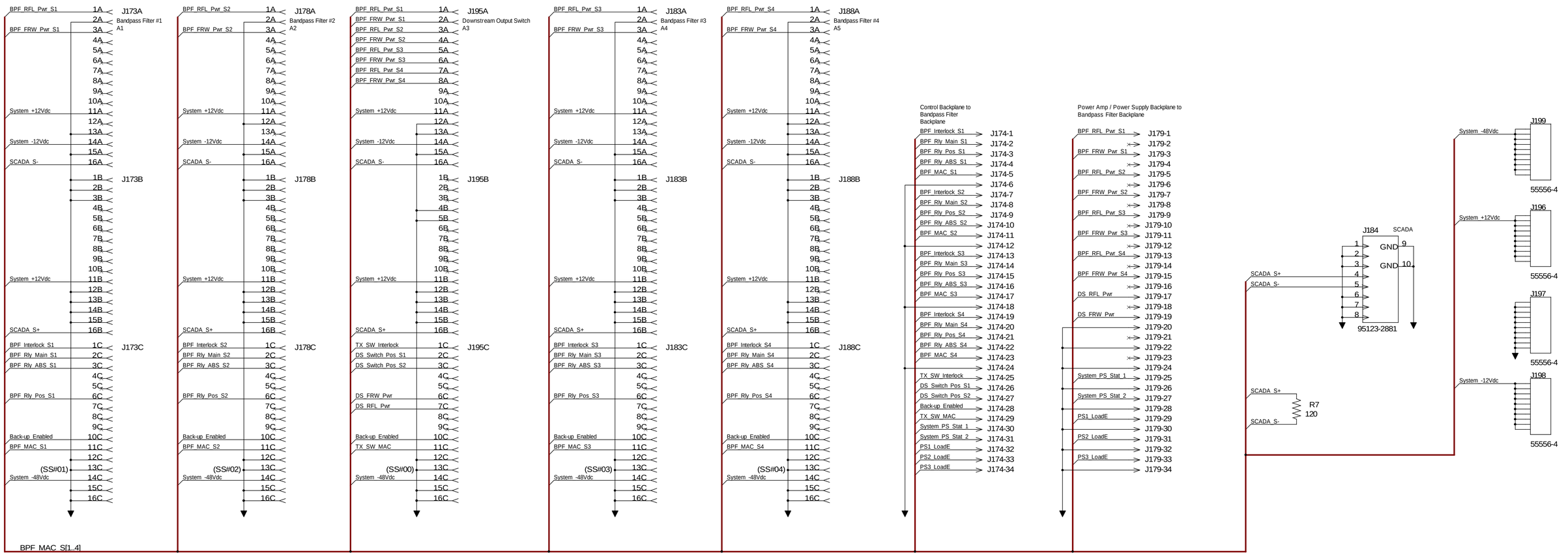

ADC Telecommunications		REV	ECO	DATE	APV
THIS PRINT IS THE PROPERTY OF ADC, IT SHALL NOT BE COPIED WITHOUT PERMISSION	TITLE SCH, BWA2000, BANDPASS FILTER BACKPLANE (1128527)				
MATERIAL -----	DWN PWN 9/05/00	DWG. NO. 1128530		REV A0	
FINISH -----	CHK REH 9/13/00				
	REL REH 9/13/00	D	SCALE - - -	SHEET 1 OF 1	

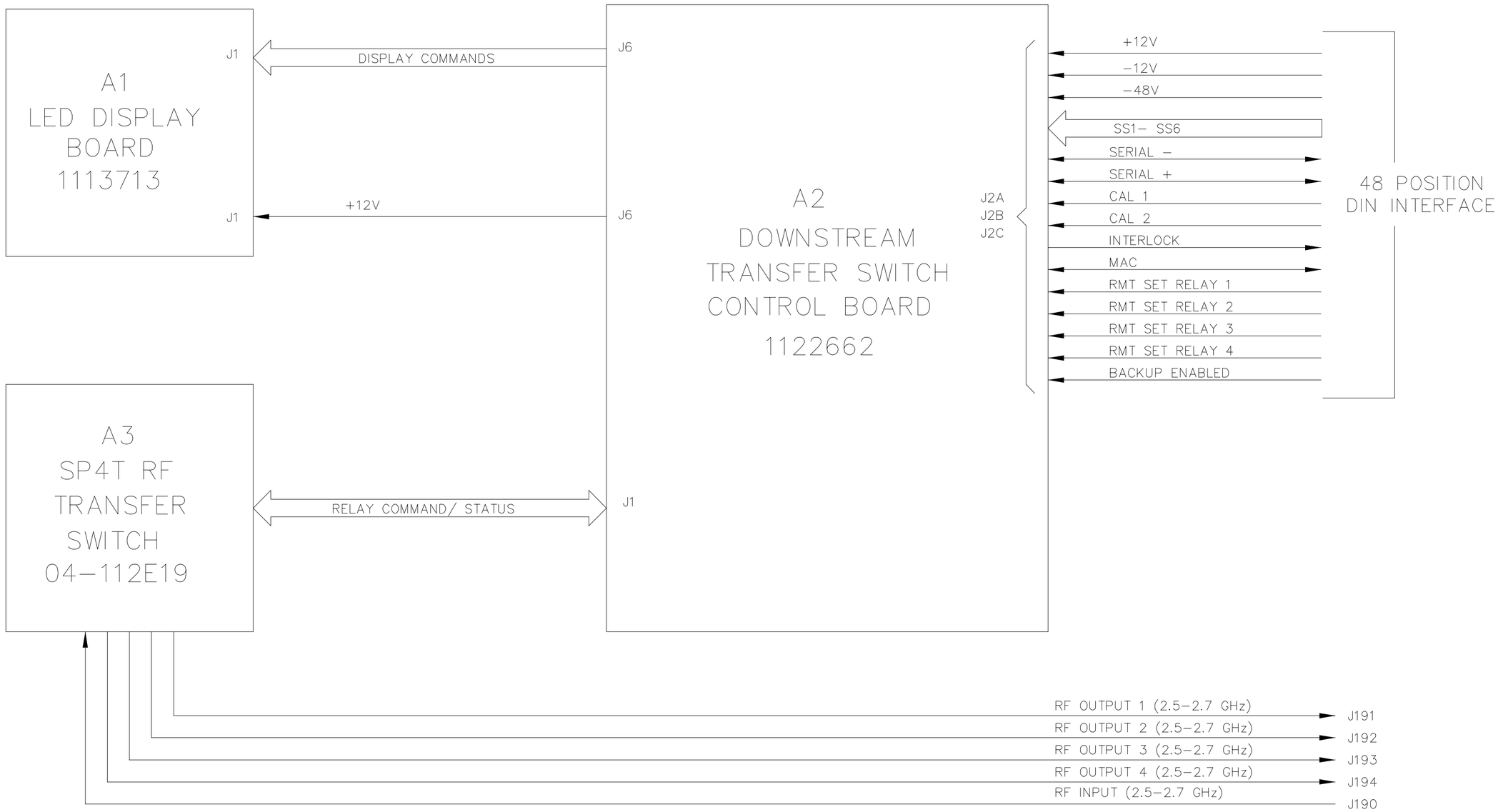

ADC Telecommunications

REV	ECO	DATE	APV

THIS PRINT IS THE PROPERTY OF ADC, IT SHALL NOT BE COPIED WITHOUT PERMISSION.

MATERIAL ----

FINISH ----

TITLE B/D, DOWNSTREAM TRANSFER SWITCH ASSEMBLY

DWN	RJB	10/18/00	DWG. NO. 1136335
CHK	JCM	10/19/00	REV A0
REL	JCM	10/19/00	C SCALE --- SHEET 1 OF 1

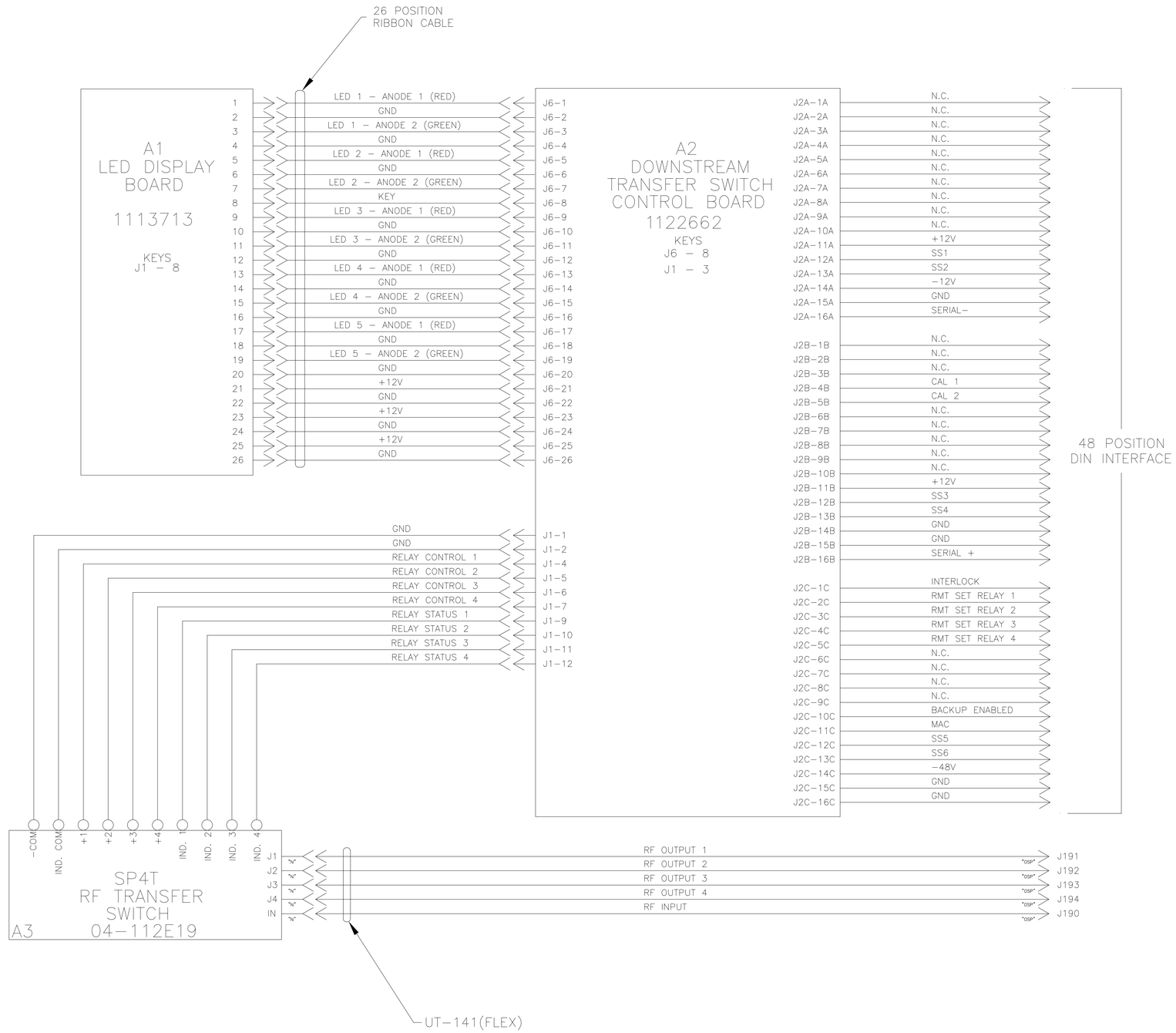

NOTE: ALL WIRE IS 22AWG UNLESS NOTED OTHER WISE.

REV	ECO	DATE	APV
B0	20084808	03/20/01	JCM

ADDED CONNECTOR SYMBOLS AT A2–J1. ADDED "FLEX" AT UT–141 REFERENCE TO INDICATE DIFFERENT COAX. PWN

ADC Telecommunications

THIS PRINT IS THE PROPERTY OF ADC. IT SHALL NOT BE COPIED WITHOUT PERMISSION.

MATERIAL

FINISH

TITLE I/C DOWNSTREAM TRANSFER SWITCH ASSY

DWN	PWN	7/21/00	
CHK	JCM	10/18/00	
REL	JCM	10/18/00	

DWG. NO. 1121610 REV B0

D SCALE NA SHEET 1 OF 1

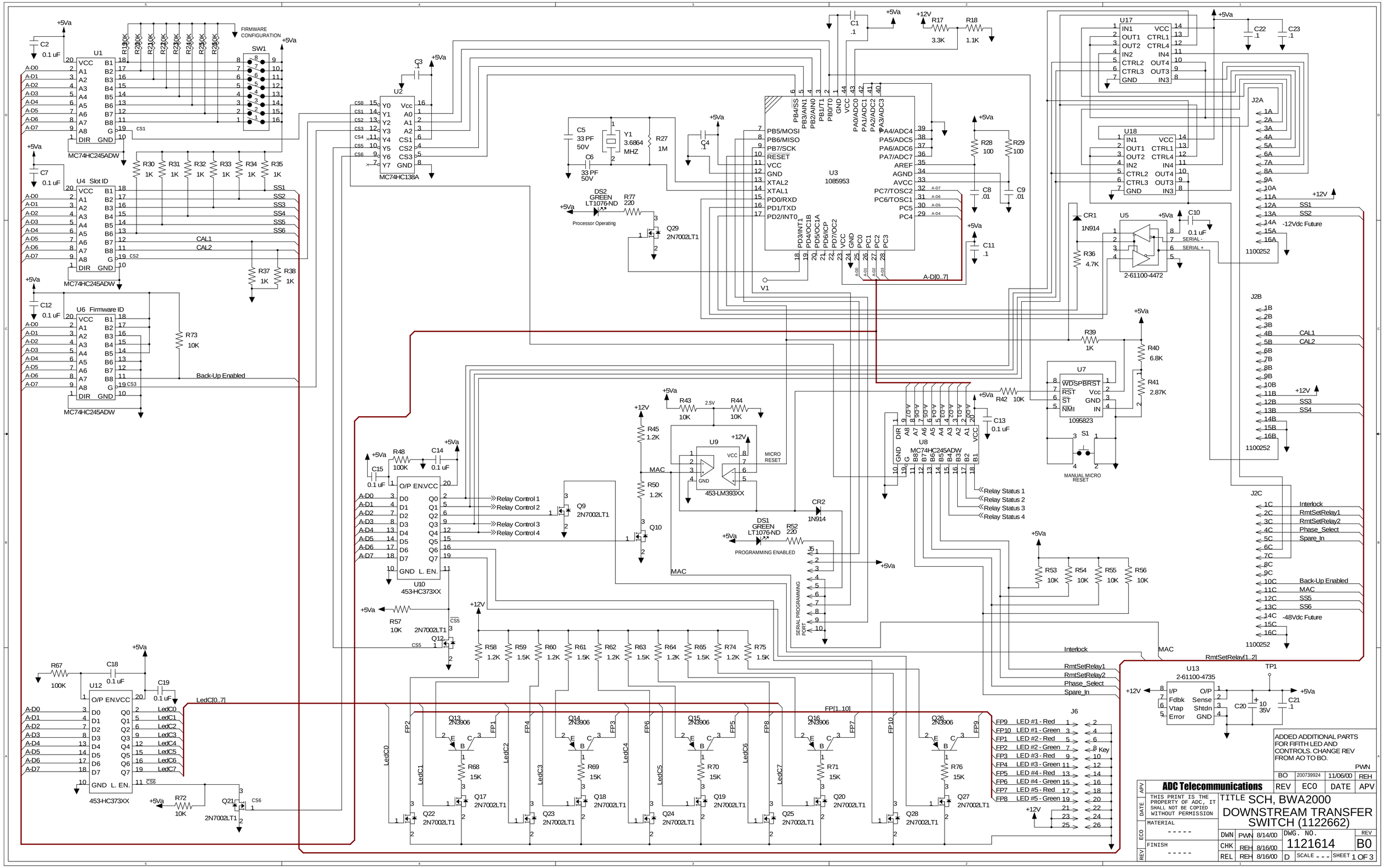
FIRMWARE CONFIGURATION
SW1
U1
MC74HC245ADW
U2
MC74HC138A
U3
1085953
Y1
3.6864 MHZ
DS2
GREEN
LT1076-ND
Processor Operating
Q29
2N7002LT1
U4 Slot ID
U6 Firmware ID
U17
U18
J2A
J2B
J2C
1100252
U5
2-61100-4472
CR1
1N914
U7
1095823
MANUAL MICRO RESET
U8
MC74HC245ADW
U9
453-LM393XX
MICRO RESET
DS1
GREEN
LT1076-ND
PROGRAMMING ENABLED
SERIAL PROGRAMMING PORT
U10
453-HC373XX
U12
453-HC373XX
U13
2-61100-4735
TP1
J6
Relay Control 1
Relay Control 2
Relay Control 3
Relay Control 4
Relay Status 1
Relay Status 2
Relay Status 3
Relay Status 4
Back-Up Enabled
Interlock
RmtSetRelay1
RmtSetRelay2
Phase_Select
Spare_In
MAC
SS1
SS2
SS3
SS4
SS5
SS6
CAL1
CAL2
-12Vdc Future
-48Vdc Future
SERIAL -
SERIAL +
LED #1 - Red
LED #1 - Green
LED #2 - Red
LED #2 - Green
LED #3 - Red
LED #3 - Green
LED #4 - Red
LED #4 - Green
LED #5 - Red
LED #5 - Green
Key
LedC[0..7]
FP[1..10]
RmtSetRelay[1..2]
ADDED ADDITIONAL PARTS FOR FIFITH LED AND CONTROLS. CHANGE REV FROM AO TO BO.
ADC Telecommunications
THIS PRINT IS THE PROPERTY OF ADC, IT SHALL NOT BE COPIED WITHOUT PERMISSION
TITLE SCH, BWA2000 DOWNSTREAM TRANSFER SWITCH (1122662)
DWG. NO. 1121614
REV B0
SCALE ---
SHEET 1 OF 3

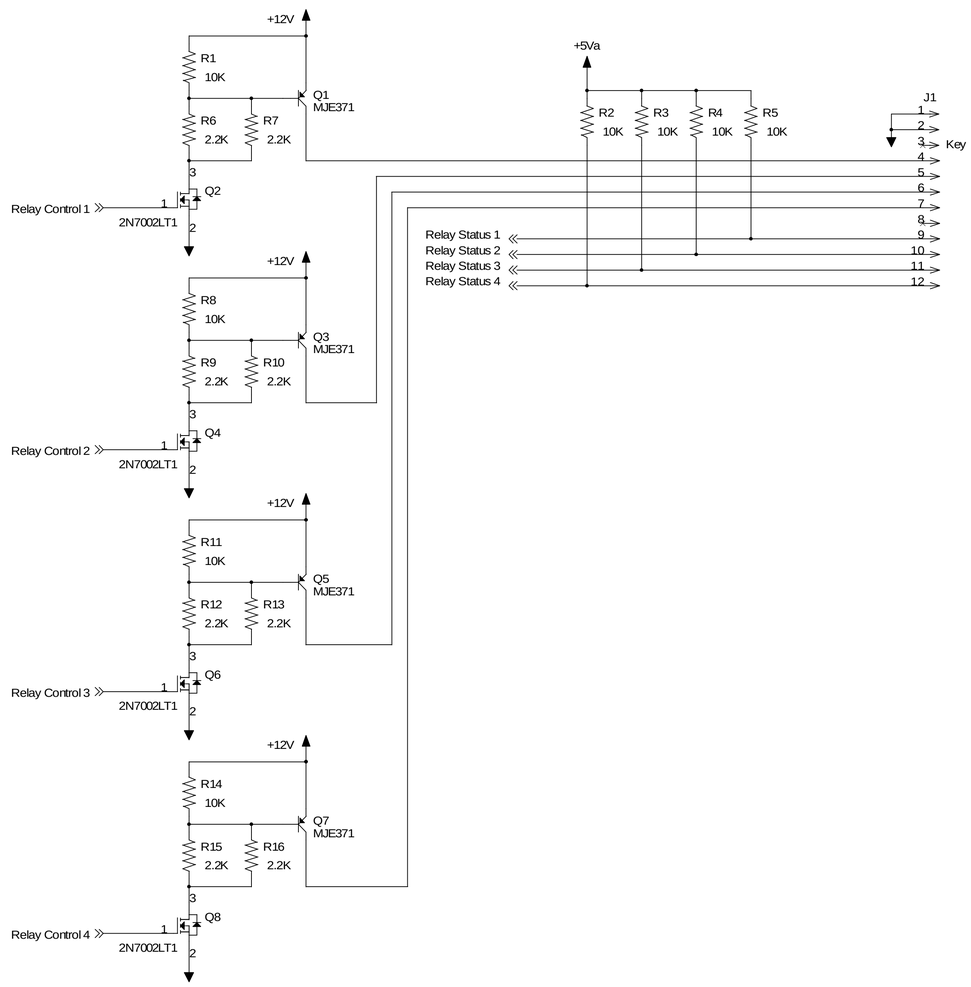

APV	ADC Telecommunications	REV	ECO	DATE	APV
DATE	THIS PRINT IS THE PROPERTY OF ADC, IT SHALL NOT BE COPIED WITHOUT PERMISSION	TITLE SCH, BWA2000 DOWNSTREAM TRANSFER SWITCH (1122662)			
ECO	MATERIAL -----	DWN PWN 8/16/00	DWG. NO. 1121614		REV B0
		CHK REH 8/16/00			
REV	FINISH -----	REL REH 8/16/00	D	SCALE ---	SHEET 2 OF 3

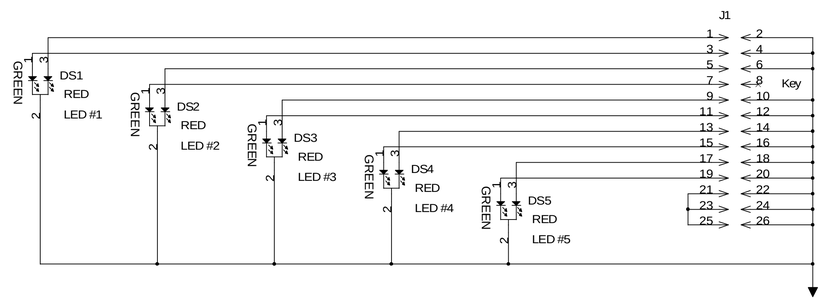

APV	ADC Telecommunications	REV	ECO	DATE	APV
DATE	THIS PRINT IS THE PROPERTY OF ADC, IT SHALL NOT BE COPIED WITHOUT PERMISSION	TITLE SCH., BWA 2000 FRONT PANEL BD. {1113713}			
ECO	MATERIAL -----	DWN PWN 6/9/00	DWG. NO. 1113710		REV A0
REV	FINISH -----	CHK REH 6/9/00			
		REL REH 6/9/00	D	SCALE - - -	SHEET 1 OF 1

TYPE O: SP3T-SP6T up to 12.4 GHz

Standard Connectors:

BNC, TNC, N

Specifications (TNC, N only):

Operating Frequency	DC-3 GHz	3-8 GHz	8-12.4 GHz
V.S.W.R. (maximum)	1.2:1	1.35:1	1.5:1
Insertion loss (max.)	0.2 dB	0.35 dB	0.5 dB
Isolation (minimum)	80 dB	70 dB	60 dB
Actuating voltage	24-30 Vdc (28 Vdc nominal)		
Actuating current	160 milliamps maximum at 28 Vdc and 72°		
Impedance	50 ohms		
Switching Time	35 milliseconds maximum		
R.F. Power	See Power Chart Page 1 • 12		
Operating Mode	Failsafe		
Operating Temp.	-35°C to +85°C		
Operating Life	1,000,000 cycles		
Environmental	Designed to meet MIL-E-5400 and MIL-S-3928		
Finish	Switch Body & Connector Shell	Aluminum, electroless nickel plated per MIL-C-26074	
	Connector Contact	Beryllium copper, gold plated per MIL-G-45204	
	Cover	Aluminum, Black	

SCHEMATICS

Latching

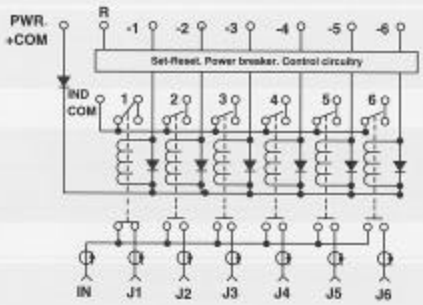

Latching with self de-energizing ckt, reset function, indicators and suppression diodes. Shown in Position 1. (Common Plus)

Normally Open

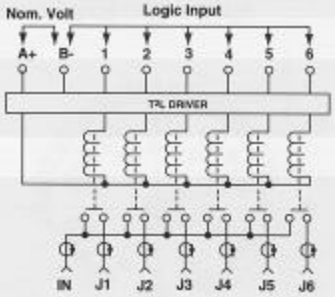

Normally open with T²L driver.

23301 S. WILMINGTON AVENUE • CARSON, CA 90745 • Tel. 310-513-7200 • FAX 310-513-0741

DMT
DIVISION OF JAY-EL PRODUCTS, INC.
A Dacommun Company

TYPE O: SP3T-SP6T up to 12.4 GHz

AVAILABLE OPTIONS

Special Options	Circuit Options	Outline Dim "A"
P and F or 1	C, J, K, N, R	1.97
P and F or 1 w/L	C, D, E, F, G, H, J, K, N, R, S	2.47
P and F or 1 w/LL	J, K, N, R	2.88
P and F or 1 w/LL	C, D, E, F, G, H, S	3.20

POWER CONNECTOR: Connector PN MS3112E14-15P, mates with MS3116F14-15S. Consult factory for Dim."A"

TYPICAL OUTLINE DRAWING

TYPICAL OUTLINE DRAWING

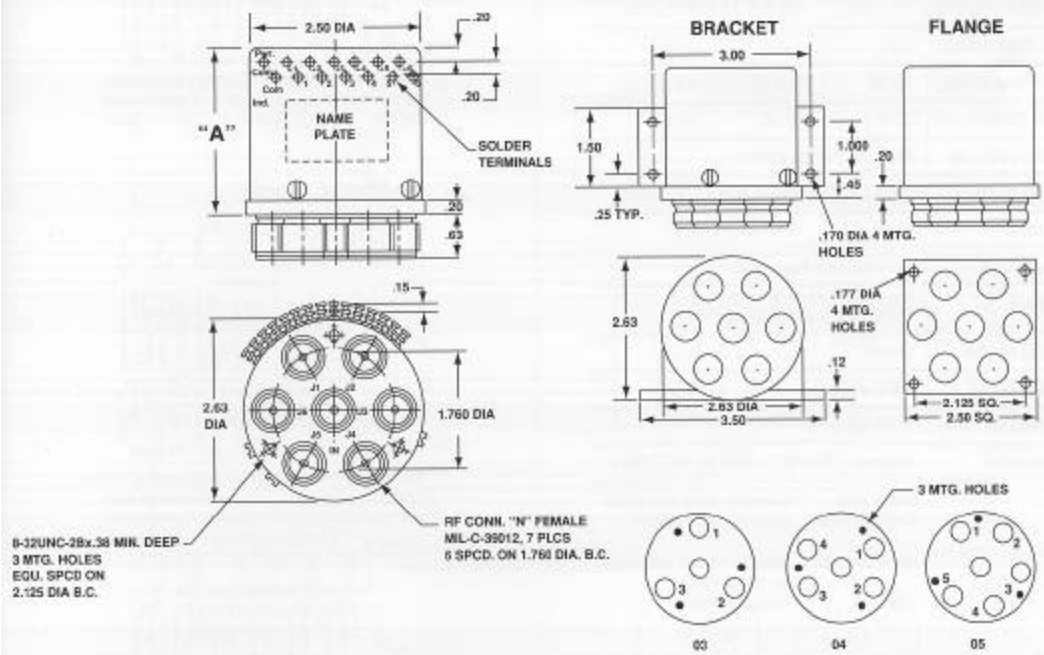

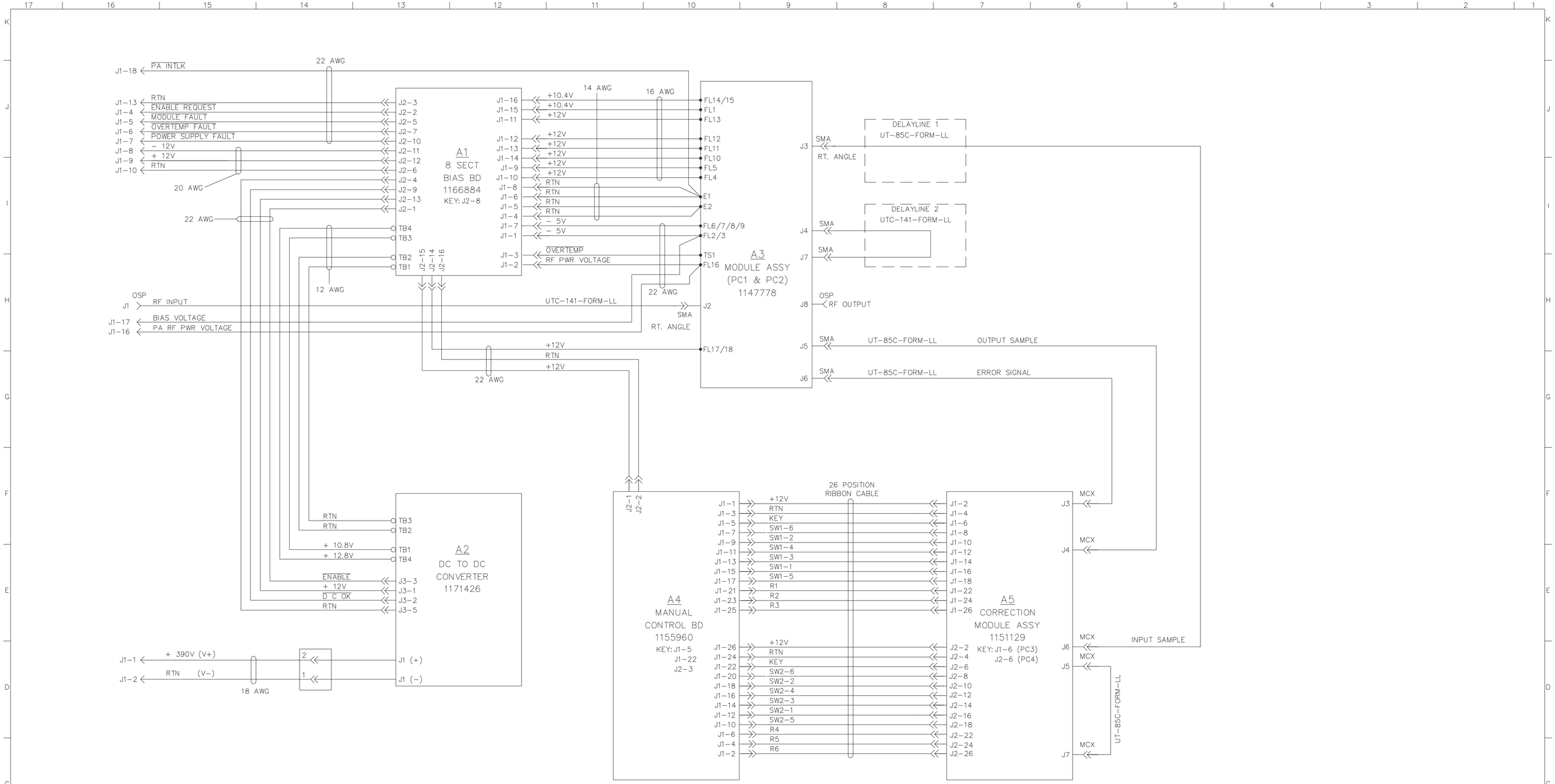

REV	ECO	DATE	APV

THIS PRINT IS THE PROPERTY OF ADC, IT SHALL NOT BE COPIED WITHOUT PERMISSION.

MATERIAL

TITLE
I/C, POWER
AMPLIFIER ASSY
AXITY BTS

DWN	CAS	4/19/01	
CHK	JCM	5/10/01	
REL	JCM	5/10/01	

DWG. NO. 1171358 REV A0

D SCALE --- SHEET 1 OF 1

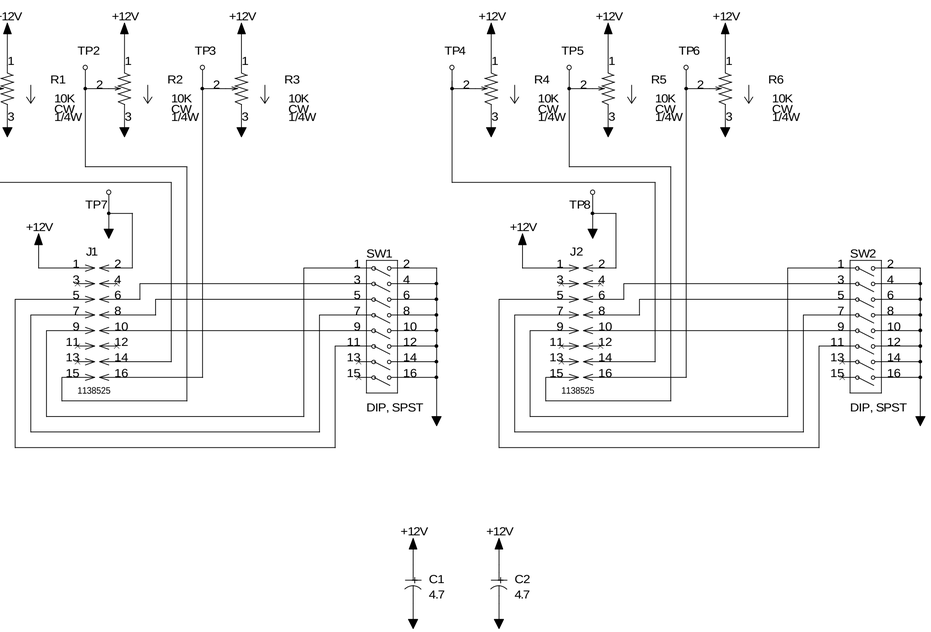

ADC Telecommunications	REV	ECO	DATE	APV	
THIS PRINT IS THE PROPERTY OF ADC, IT SHALL NOT BE COPIED WITHOUT PERMISSION	TITLE SCH, MANUAL CONTROL BOARD (1155960)				
MATERIAL -----	DWN	PWN	02/02/01	DWG. NO. 1155954	REV A0
FINISH -----	CHK	GKS	02/13/01		
	REL	GKS	02/13/01	D	SCALE --- SHEET 1 OF 1

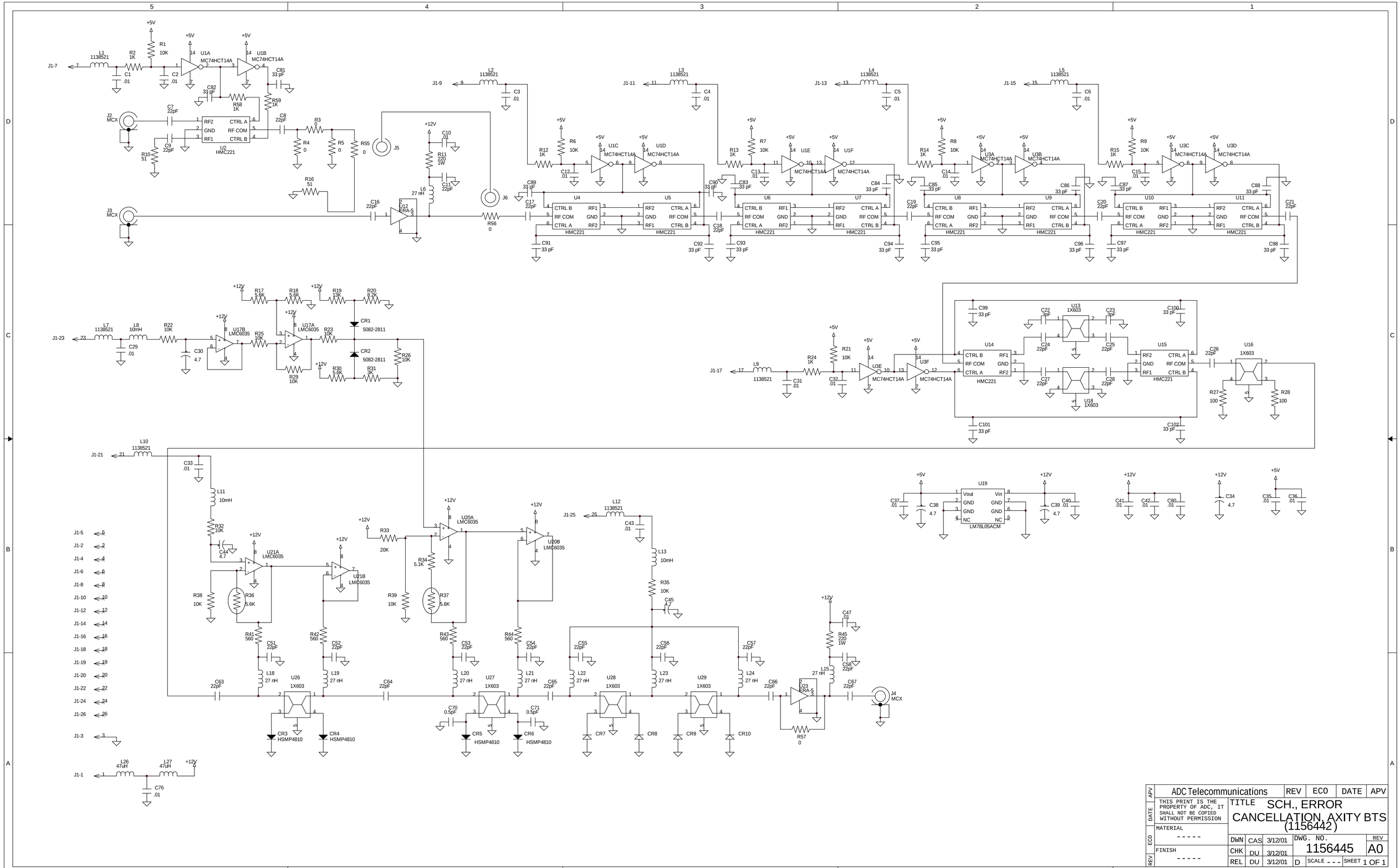

ADC Telecommunications		REV	ECO	DATE	APV
THIS PRINT IS THE PROPERTY OF ADC, IT SHALL NOT BE COPIED WITHOUT PERMISSION	TITLE SCH., ERROR CANCELLATION, AXITY BTS (1156442)				
MATERIAL -----	DWN	CAS	3/12/01	DWG. NO. 1156445	REV A0
FINISH -----	CHK	DU	3/12/01		
	REL	DU	3/12/01	D	SCALE --- SHEET 1 OF 1

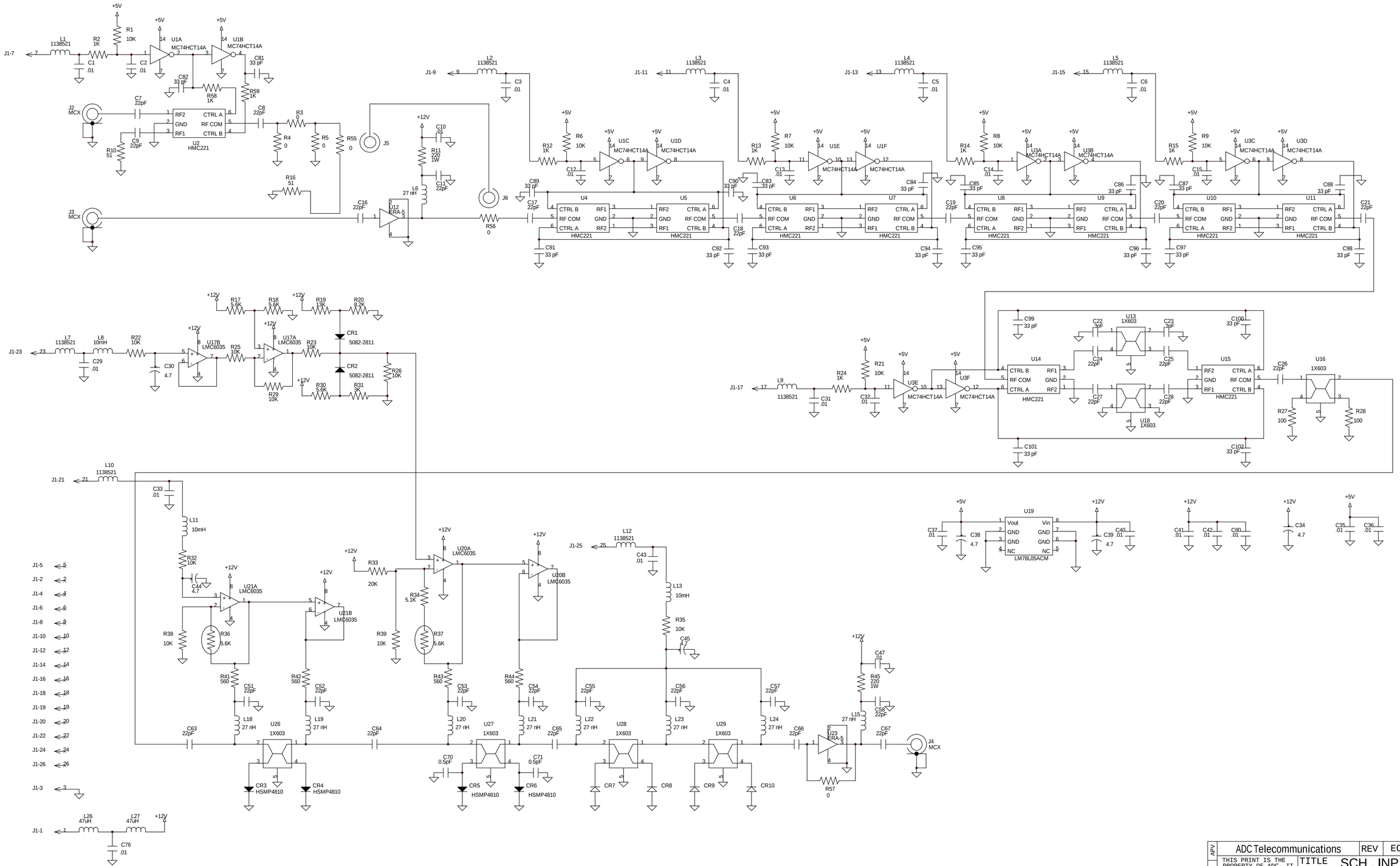

ADC Telecommunications		REV	ECO	DATE	APV
THIS PRINT IS THE PROPERTY OF ADC, IT SHALL NOT BE COPIED WITHOUT PERMISSION	TITLE SCH., INPUT SIGNAL CORRECTION, AXITY BTS (1156443)				
MATERIAL -----	DWN CAS 3/12/01	DWG. NO. 1156444		REV A0	
FINISH -----	CHK DU 3/12/01				
	REL DU 3/12/01	D	SCALE ---	SHEET 1 OF 1	

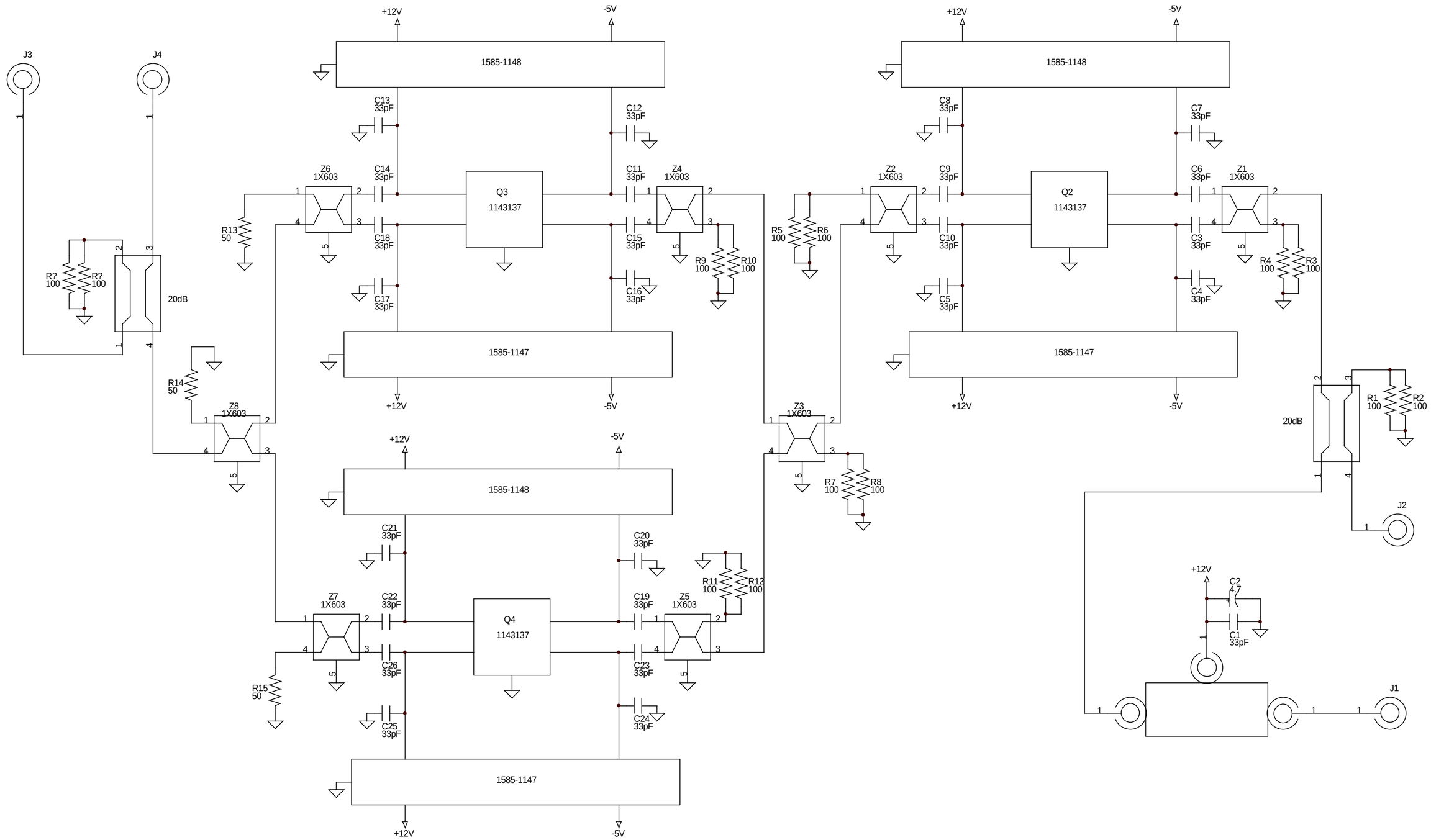

APV	ADC Telecommunications	REV	ECO	DATE	APV
DATE	THIS PRINT IS THE PROPERTY OF ADC, IT SHALL NOT BE COPIED WITHOUT PERMISSION	TITLE	SCH., POWER AMP BD AXITY BTS		
ECO	MATERIAL -----	DWN	CAS	4/16/01	DWG. NO. 1165711 REV A0
REV	FINISH -----	CHK	DJU	4/16/01	
		REL	DJU	4/16/01	C SCALE --- SHEET 1 OF 1

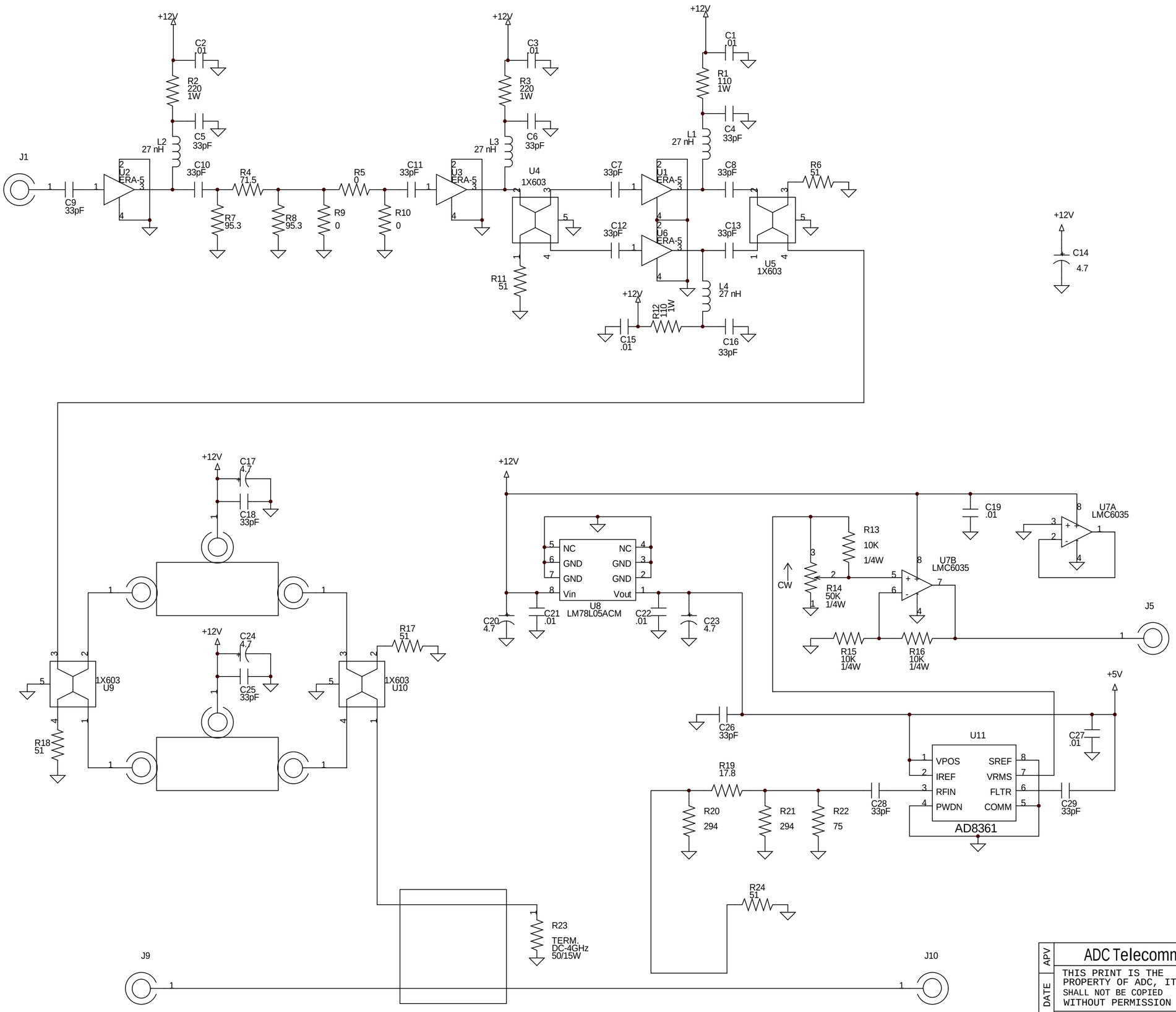

ADC Telecommunications	REV	ECO	DATE	APV
THIS PRINT IS THE PROPERTY OF ADC, IT SHALL NOT BE COPIED WITHOUT PERMISSION	TITLE SCH., CORRECTION AMP BD AXITY BTS			
MATERIAL -----	DWN	CAS	4/16/01	DWG. NO. 1165714 REV A0
FINISH -----	CHK	DJU	4/16/01	
	REL	DJU	4/16/01	C SCALE --- SHEET 1 OF 1

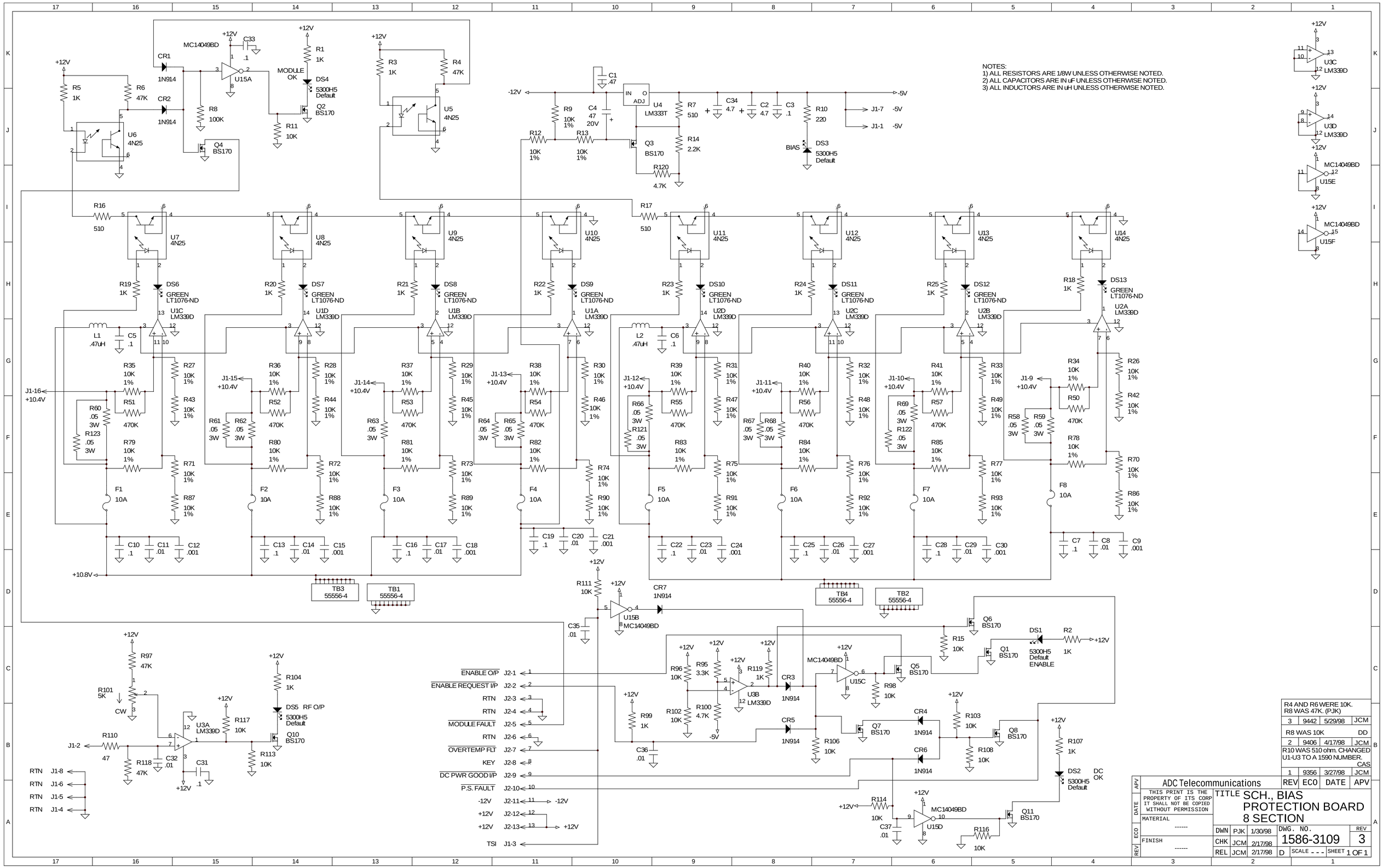
NOTES:
1) ALL RESISTORS ARE 1/8W UNLESS OTHERWISE NOTED.
2) ALL CAPACITORS ARE IN uF UNLESS OTHERWISE NOTED.
3) ALL INDUCTORS ARE IN uH UNLESS OTHERWISE NOTED.
MC14049BD
U15A
U15B
U15C
U15D
U15E
U15F
U3C LM339D
U3D LM339D
U4 LM333T
U3A LM339D
U3B LM339D
U1C LM339D
U1D LM339D
U1B LM339D
U1A LM339D
U2D LM339D
U2C LM339D
U2B LM339D
U2A LM339D
U6 4N25
U5 4N25
U7 4N25
U8 4N25
U9 4N25
U10 4N25
U11 4N25
U12 4N25
U13 4N25
U14 4N25
Q2 BS170
Q3 BS170
Q4 BS170
Q5 BS170
Q6 BS170
Q7 BS170
Q8 BS170
Q10 BS170
Q11 BS170
Q1 BS170
DS4 5300H5 Default
DS3 5300H5 Default
DS1 5300H5 Default ENABLE
DS5 RF O/P 5300H5 Default
DS2 DC OK 5300H5 Default
DS6 GREEN LT1076-ND
DS7 GREEN LT1076-ND
DS8 GREEN LT1076-ND
DS9 GREEN LT1076-ND
DS10 GREEN LT1076-ND
DS11 GREEN LT1076-ND
DS12 GREEN LT1076-ND
DS13 GREEN LT1076-ND
TB1 55556-4
TB2 55556-4
TB3 55556-4
TB4 55556-4
ENABLE O/P J2-1
ENABLE REQUEST I/P J2-2
RTN J2-3
RTN J2-4
MODULE FAULT J2-5
RTN J2-6
OVERTEMP FLT J2-7
KEY J2-8
DC PWR GOOD I/P J2-9
P.S. FAULT J2-10
-12V J2-11
+12V J2-12
+12V J2-13
TSI J1-3
J1-16 +10.4V
J1-15 +10.4V
J1-14 +10.4V
J1-13 +10.4V
J1-12 +10.4V
J1-11 +10.4V
J1-10 +10.4V
J1-9 +10.4V
J1-2
RTN J1-8
RTN J1-6
RTN J1-5
RTN J1-4
J1-7 -5V
J1-1 -5V
+10.8V
R4 AND R6 WERE 10K.
R8 WAS 47K. (PJK)
3 9442 5/29/98 JCM
R8 WAS 10K DD
2 9406 4/17/98 JCM
R10 WAS 510 ohm. CHANGED
U1-U3 TO A 1590 NUMBER.
CAS
1 9356 3/27/98 JCM
ADC Telecommunications
REV ECO DATE APV
THIS PRINT IS THE PROPERTY OF ITS CORP IT SHALL NOT BE COPIED WITHOUT PERMISSION
MATERIAL ------
FINISH ------
TITLE SCH., BIAS PROTECTION BOARD 8 SECTION
DWN PJK 1/30/98
CHK JCM 2/17/98
REL JCM 2/17/98
DWG. NO. 1586-3109
REV 3
SCALE - - -
SHEET 1 OF 1

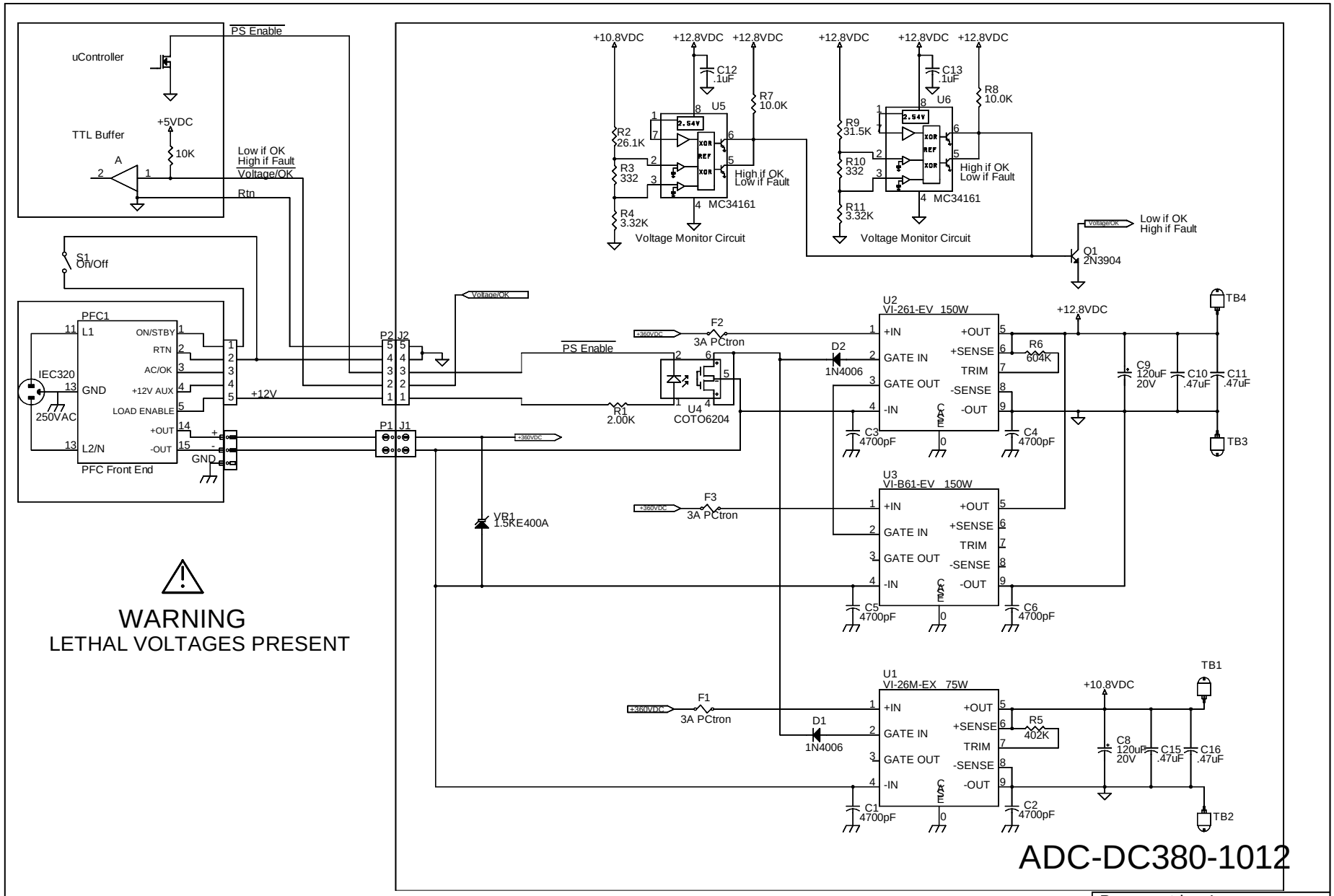

Powermetrics, Inc.
749 Miner Rd.
Highland Heights, Ohio 44143

Title		
ADC Dual Output Power Supply Schematic		
Size C	Document Number ADC-DC380-1012	REV A
Date: December 7, 2000	Sheet 1 of 1	

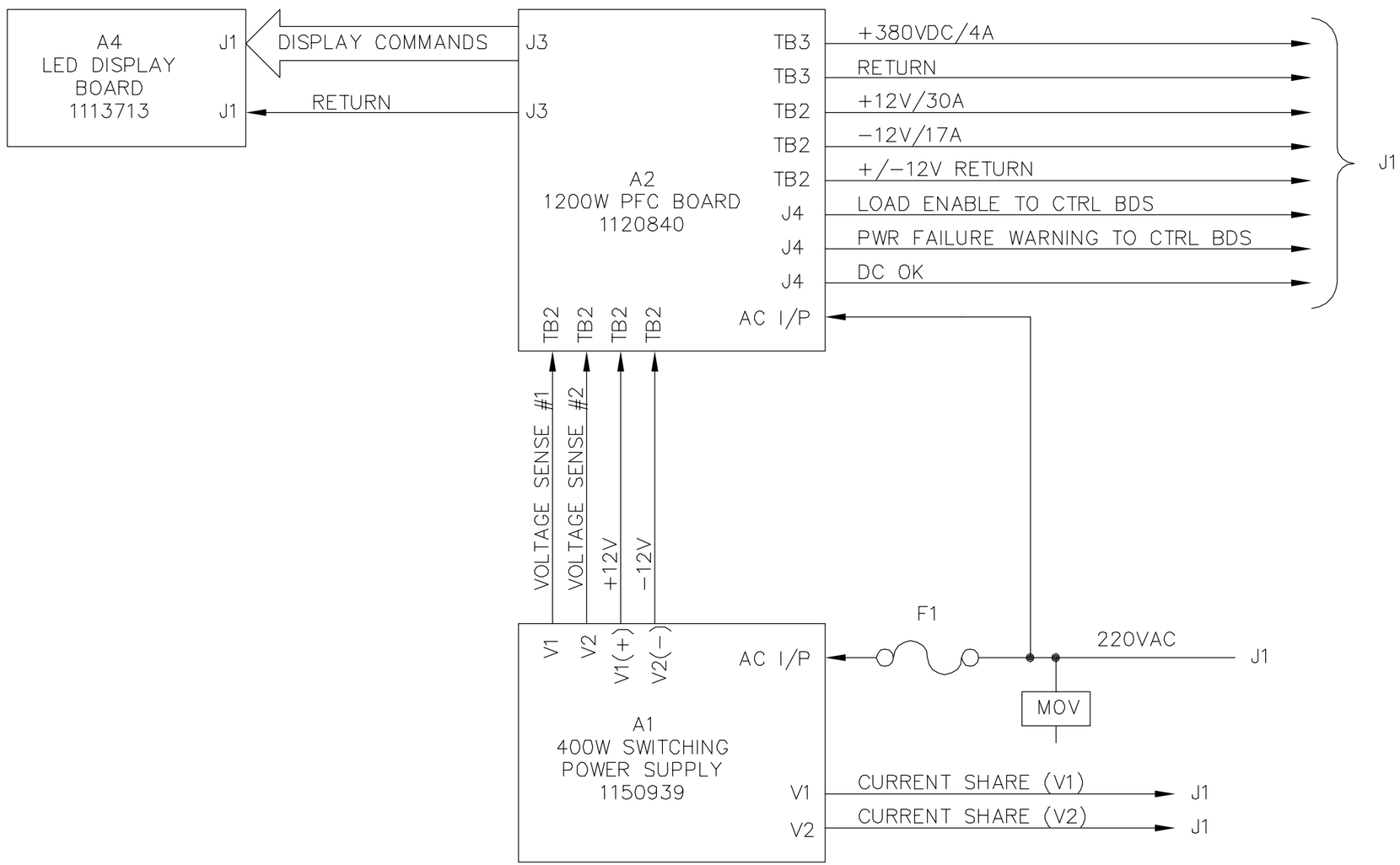

REV	ECO	DATE	APV

REV	ECO	DATE	APV

ADC

THIS PRINT IS THE PROPERTY OF ADC, IT SHALL NOT BE COPIED WITHOUT PERMISSION.

MATERIAL
– – – – –

FINISH
– – – – –

TITLE
B/D, POWER SUPPLY ASSEMBLY, AXITY BTS

DWN	JKF	2/5/01	DWG. NO. 1151455	REV A0
CHK	JCM	2/21/01		
REL	JCM	2/21/01	B SCALE – – –	SHEET 1 OF 1

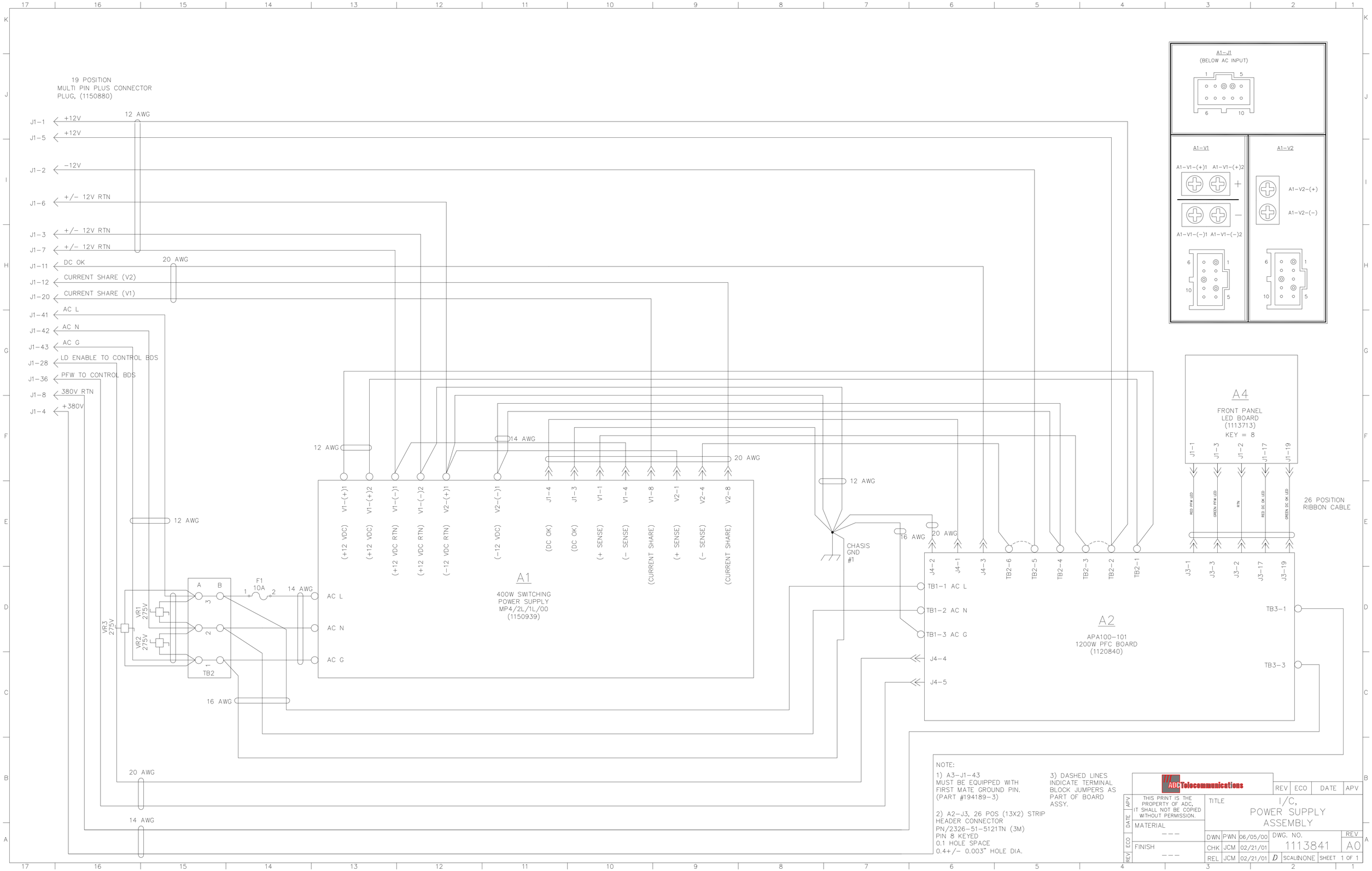

NOTE:

1) A3-J1-43 MUST BE EQUIPPED WITH FIRST MATE GROUND PIN. (PART #194189-3)

2) A2-J3, 26 POS (13X2) STRIP HEADER CONNECTOR PN/2326-51-5121TN (3M) PIN 8 KEYED 0.1 HOLE SPACE 0.4+/- 0.003" HOLE DIA.

3) DASHED LINES INDICATE TERMINAL BLOCK JUMPERS AS PART OF BOARD ASSY.

ADC Telecommunications

THIS PRINT IS THE PROPERTY OF ADC, IT SHALL NOT BE COPIED WITHOUT PERMISSION.

REV	ECO	DATE	APV

TITLE: I/C, POWER SUPPLY ASSEMBLY

MATERIAL: ---

FINISH: ---

DWN	PWN	06/05/00	DWG. NO. 1113841
CHK	JCM	02/21/01	REV A0
REL	JCM	02/21/01	D SCALE NONE SHEET 1 OF 1

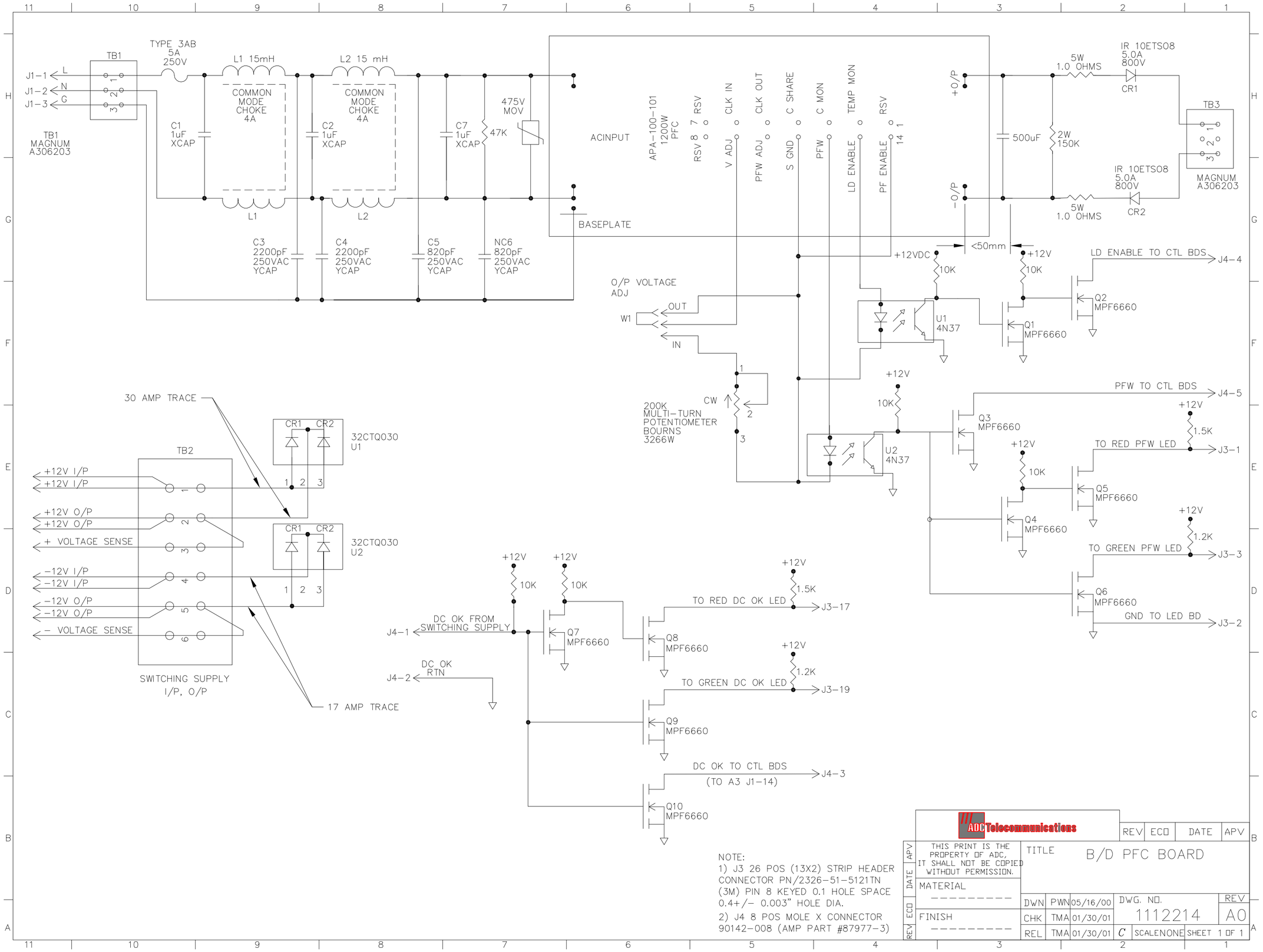
TB1
J1-1 L
J1-2 N
J1-3 G
TB1 MAGNUM A306203
TYPE 3AB 5A 250V
C1 1uF XCAP
L1 15mH
COMMON MODE CHOKE 4A
L1
C2 1uF XCAP
L2 15 mH
COMMON MODE CHOKE 4A
L2
C3 2200pF 250VAC YCAP
C4 2200pF 250VAC YCAP
C7 1uF XCAP
47K
475V MOV
C5 820pF 250VAC YCAP
NC6 820pF 250VAC YCAP
ACINPUT
BASEPLATE
APA-100-101 1200W PFC
RSV 7
RSV 8
V ADJ
CLK IN
PFW ADJ
CLK OUT
S GND
C SHARE
PFW
C MON
LD ENABLE
TEMP MON
PF ENABLE
RSV 14
+O/P
-O/P
500uF
2W 150K
5W 1.0 OHMS
IR 10ETS08 5.0A 800V
CR1
CR2
TB3
MAGNUM A306203
<50mm
+12VDC
10K
+12V
LD ENABLE TO CTL BDS
J4-4
Q2 MPF6660
Q1 MPF6660
U1 4N37
O/P VOLTAGE ADJ
W1
OUT
IN
200K MULTI-TURN POTENTIOMETER BOURNS 3266W
CW
U2 4N37
PFW TO CTL BDS
J4-5
Q3 MPF6660
1.5K
TO RED PFW LED
J3-1
Q5 MPF6660
Q4 MPF6660
1.2K
TO GREEN PFW LED
J3-3
Q6 MPF6660
GND TO LED BD
J3-2
30 AMP TRACE
TB2
+12V I/P
+12V I/P
+12V O/P
+12V O/P
+ VOLTAGE SENSE
-12V I/P
-12V I/P
-12V O/P
-12V O/P
- VOLTAGE SENSE
SWITCHING SUPPLY I/P, O/P
32CTQ030 U1
32CTQ030 U2
17 AMP TRACE
DC OK FROM SWITCHING SUPPLY
J4-1
DC OK RTN
J4-2
Q7 MPF6660
Q8 MPF6660
TO RED DC OK LED
J3-17
TO GREEN DC OK LED
J3-19
Q9 MPF6660
DC OK TO CTL BDS
(TO A3 J1-14)
J4-3
Q10 MPF6660
NOTE:
1) J3 26 POS (13X2) STRIP HEADER CONNECTOR PN/2326-51-5121TN (3M) PIN 8 KEYED 0.1 HOLE SPACE 0.4+/- 0.003" HOLE DIA.
2) J4 8 POS MOLE X CONNECTOR 90142-008 (AMP PART #87977-3)
ADC Telecommunications
REV ECO DATE APV
THIS PRINT IS THE PROPERTY OF ADC, IT SHALL NOT BE COPIED WITHOUT PERMISSION.
TITLE B/D PFC BOARD
MATERIAL
FINISH
DWN PWN 05/16/00
CHK TMA 01/30/01
REL TMA 01/30/01
DWG. NO. 1112214
REV A0
SCALE NONE
SHEET 1 OF 1

ASIA
6F, China Dyeing Works Building
383-392 Castle Peak Road
Tsuen Wan, N.T., Hong Kong
Telephone: 852-2437-9662
Facsimile: 852-2402-4425

EUROPE
Astec House, Waterfront Business Park
Merry Hill, Dudley
West Midlands, DY5 1LX, UK
Telephone: 01384-842211
Facsimile: 01384-843355

AMERICAS
5810 Van Allen Way
Carlsbad, CA 92008
Telephone: 760-930-4600
Facsimile: 760-930-0698

ASTEC

ELECTRICAL SPECIFICATIONS

Input

Input voltage	85-264 VAC 120-350 VDC
Frequency	47-440 Hz
Inrush current	40 A peak max.
Efficiency	70-80% typ. @ full case load
Power factor	0.99 typ. meets EN61000-3-2
Turn-on time	AC on 1.5 sec typ., Inhibit / Enable 150 ms typ.
EMI filter standard	CISPR 22 EN55022 Level "B"
EMI filter (low leakage option)	CISPR 22 EN55022 Level "A"
Leakage current standard	2.0 mA max. @ 240 VAC
Leakage current (low leakage option)	300 µA max. @ 240 VAC
Radiated EMI	CISPR 22 EN55022 Level "B"
Holdover storage	20 ms minimum (independent of input VAC)
AC OK	>5 ms early warning min. before outputs loose regulation Full cycle ride thru (50 Hz)
Harmonic distortion	Meets EN61000-3-2
Isolation	Meets EN60950
Global Inhibit/Enable	TTL, Logic "1" and Logic "0"
Input fuse (internal)	MP4: 10 A MP6: 15 A MP8: 20 A MP1: 20 A
Warranty	1 year

Power Derating Curve

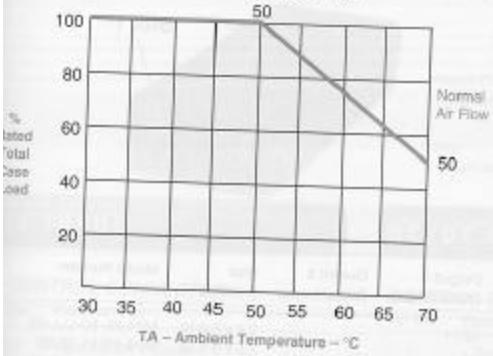

Output

Adjustment range	±10% min. all outputs
Margining	±4-6% nom.[1]
Overall reg	0.4% or 20 mV max. (36 W modules 4% max.)
Ripple	RMS: 0.1% or 10 mV, whichever is greater Pk-Pk: 1.0% or 50 mV, whichever is greater Bandwidth limited to 20 MHz
Dynamic response	<2% or 100 mV, with 25% load step.
Recovery time	To within 1% in <300 µsec.
Overcurrent protection	Single, main of dual output module 105-120% of rated output current. Aux output of dual output module 105-140% of rated output current. Triple output module Internally protected
Short circuit protection	Protected for continuous short circuit. Recovery is automatic upon removal of short
Overvoltage protection (measured at sense connection)	Single output modules 2-5.5 V 122-134% 6-60 V 110-120% Dual output module 2-6 V 122-134% 8-28 V 110-120% Triple output module. No overvoltage protection provided. Recycle the AC input voltage to reset OVP circuit
Reverse voltage protection	100% of rated output current
Thermal protection	All outputs disabled when internal temp exceeds safe operating range. >5 ms warning (AC OK signal) before shutdown
Remote sense	Up to 0.5 V total drop
Single wire parallel	Current share to within 2% of total rated current[2]
DC OK	-2% to -8% of nominal for any monitored output[2]
Minimum load	Not required on single or triple output modules. 10% required on main of dual output modules[3]
Housekeeping Bias voltage	5 VDC @250 mA max. present whenever AC input is applied (Consult factory if higher output current required)
Module inhibit	TTL, isolated, singles and dual (both outputs) only
Switching frequency	250 kHz
Output/Output isolation	>1 Megohm
VME signal option board	POR signal

Notes:
1 Single output modules only.
2 Single and main of dual output modules only.
3 Contact factory for optional preload if required.

Common Examples and Specifications

Case Size (inches):
4 = 2.5 x 5 x 10, 5 available slots, 400 W max.
6 = 2.5 x 5 x 11, 5 available slots, 600 W max.
8 = 2.5 x 7 x 10, 6 available slots, 800 W max.
1 = 2.5 x 8 x 11, 7 available slots, 1000 W max.

Option Code:
0 = no options
1 = rear air exhaust
3 = global enable
5 = option package (options 1 & 3)
M = low leakage
N = low leakage plus option 1
P = low leakage plus option 3
R = low leakage plus option 5

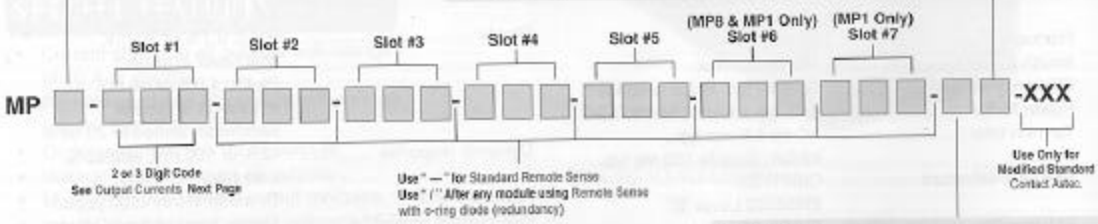

Notes:
1. Omit digits that do not apply.
2. Specify modules from lowest number of outputs to highest.(Single/Dual/Triple)
3. If number of outputs are equal, specify modules from highest to lowest power increments. If power increments are equal, specify in decending alphabetical order (1A, B, C...).
4. Always start with Slot 1.
5. All MVP model configurations created using this selection guide are standard MVP products with standard availability and lead times.

Parallel Code:

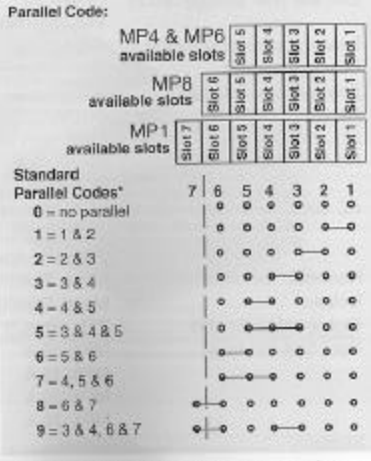

*For custom parallel configurations, contact Astec.

Ordering Example:

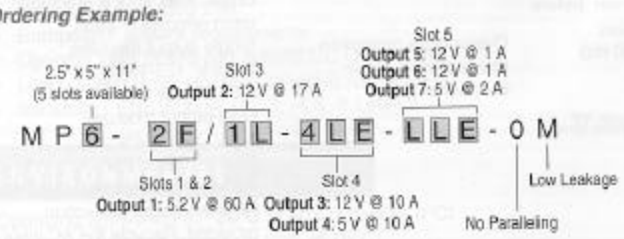

COMMON EXAMPLES OF MODEL NUMBERS

SINGLE OUTPUTS

Total Power	Output (Volts/Amps)	Size (inches)	Model Number
360 W	2 / 180	2.5 x 5 x 10	MP4-3A-2A-30
400 W	5 / 80	2.5 x 5 x 10	MP4-3E-00 - 429
600 W	2 / 275	2.5 x 8 x 11	MP6-3A-3A-1A-90
600 W	5 / 120	2.5 x 5 x 11	MP6-3E-00
600 W	48 / 12.5	2.5 x 5 x 11	MP6-3W-00
800 W	5 / 160	2.5 x 7 x 10	MP8-3E-2E-30 - 415
800 W	48 / 16.6	2.5 x 7 x 10	MP8-3W-1W-30
1000 W	5 / 200	2.5 x 8 x 11	MP1-3E-3E-30 - 404

MULTIPLE OUTPUTS

Total Power	Output 1 (Volts/Amps)	Output 2 (Volts/Amps)	Output 3 (Volts/Amps)	Output 4 (Volts/Amps)	Output 5 (Volts/Amps)	Output 6 (Volts/Amps)	Size (inches)	Model Number
400 W	5 / 60	3.3 / 35	12 / 1	12 / 1	12 / 1	—	2.5 x 5 x 10	MP4-2E-1D-LLL-00
400 W	24 / 15	12 / 17	5 / 35	—	—	—	2.5 x 5 x 10	MP4-2Q-1L-1E-00
400 W	5 / 60	12 / 17	12 / 10	5 / 10	—	—	2.5 x 5 x 10	MP4-2E-1L-4LE-00
400 W	5 / 35	12 / 10	3.3 / 10	12 / 1	12 / 1	5 / 2	2.5 x 5 x 10	MP4-1E-4LD-LLE-00
600 W	3 / 60	5 / 60	12 / 10	12 / 4	—	—	2.5 x 5 x 11	MP6-2C-2E-4LL-00
600 W	5 / 120	12 / 17	12 / 10	5 / 10	—	—	2.5 x 5 x 11	MP6-3E-1L-4LE-00
600 W	12 / 30	5 / 35	—	—	—	—	2.5 x 5 x 11	MP6-2L-1E-00
800 W	36 / 16.6	24 / 4	5 / 10	12 / 10	12 / 4	—	2.5 x 7 x 10	MP8-3U-4QE-4LL-00
800 W	5 / 120	3.3 / 35	12 / 17	12 / 10	12 / 4	—	2.5 x 7 x 10	MP8-3E-1D-1L-4LL-00
800 W	15 / 20	5 / 35	15 / 14	24 / 8.5	15 / 8	5 / 10	2.5 x 7 x 10	MP8-2N-1E-1N-1Q-4NE-00
800 W	2 / 180	5 / 60	—	—	—	—	2.5 x 7 x 10	MP8-3A-2A-2E-30
1000 W	3.3 / 120	5 / 120	—	—	—	—	2.5 x 8 x 11	MP1-3D-3E-00

USA: 1-888-41-ASTEC Europe (UK): 01384-842211 Asia (HK): 852-2437-9662

MVP Series

DRAWINGS • MVP SERIES MP4 (400 WATTS MAX) AND MP6 (600 WATTS MAX)

5-Inch Case Size: MP4: 2.5" x 5" x 10" (63.5mm x 127mm x 254mm)
5-Inch Case Size: MP6: 2.5" x 5" x 11" (63.5mm x 127mm x 279.4mm)
Weight: MP4 Case: 2.6 lbs. • MP6 Case: 3.2 lbs. • 36 W Triple: 0.5 lb. 210 W Single: 0.6 lb. • 360 W Single 1.0 lb. • 600 W Single: 2.0 lbs. 144 W Dual: 0.6 lb.

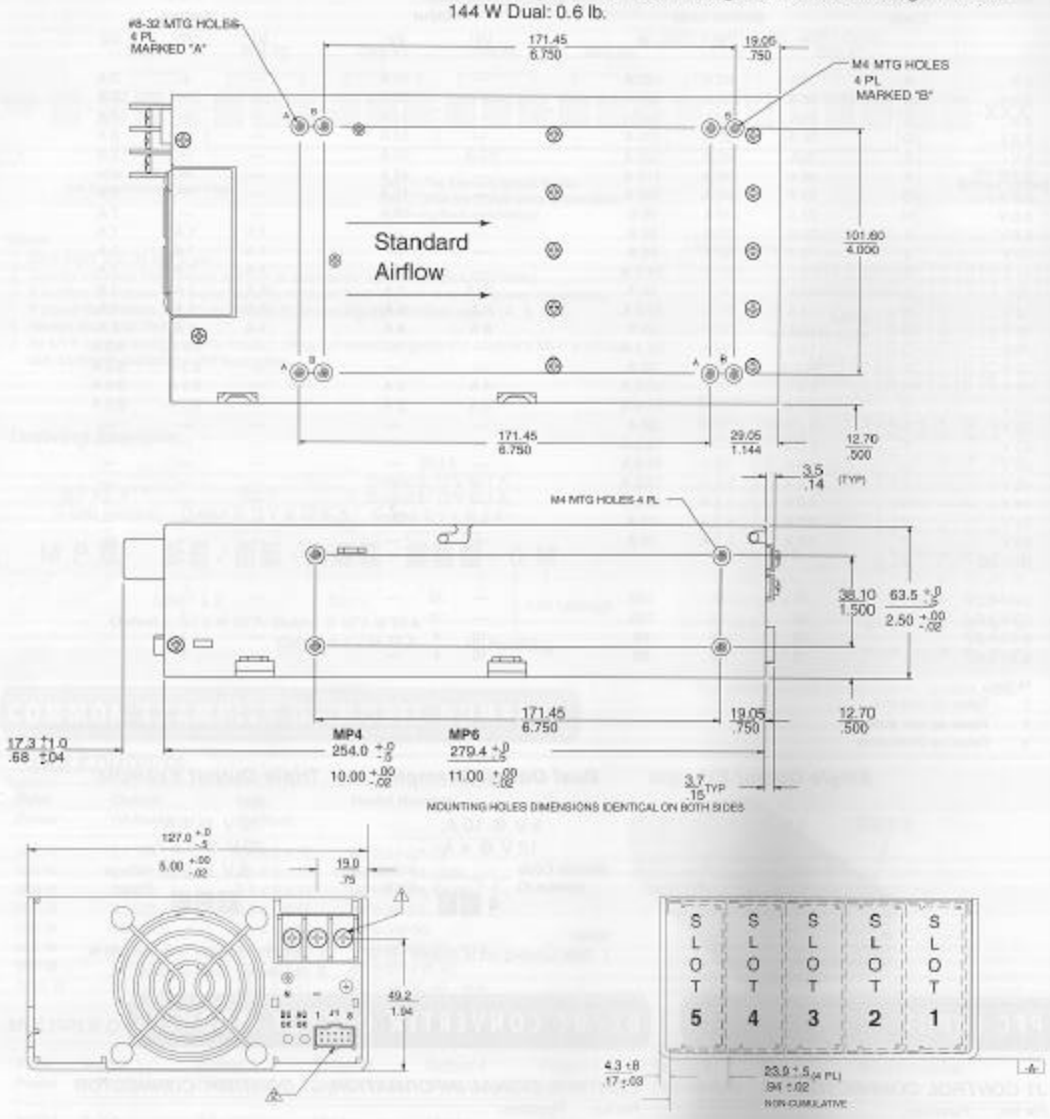

NOTES

1. Input: Barrier type. Three No. 6-32 B.H. screws (0.375" centers). Max torque: 6 in-lbs. (0.67 N-m).
2. Control connectors: (J1 and J2) 10 position housing, gold plated contacts. Mates with Molex 90142-0010 housing with 90119-2110 crimp contacts (Molex C - Grid III Series) or AMP Model number 87977-3 with 87309-8 pins.
   Connector kit includes mating connector and 10 pins, Astec part #70-841-004.
3. Chassis material: aluminum with chemical film coating. (Conductive)
4. All dimensions are in millimeters and inches and are typical.
5. Customer mounting -3 sides M4, bottom also includes 8-32 mounting holes. Max. penetration is 0.150" (3.8mm). Max. torque: 5in-lbs.
6. Output module connections: All single O/P modules are M4 x 8mm screws. Max. torque: 10in-lbs.
   Dual O/P module is M3 x 8mm screws. Max. torque: 5 in-lbs.
   Triple O/P module is .045" square pins on .156" centers. (Mates with Molex 09-50-8063 or equivalent.)

USA: 1-888-41-ASTEC Europe (UK): 01384-842211 Asia (HK): 852-2437-9662

ASTEC

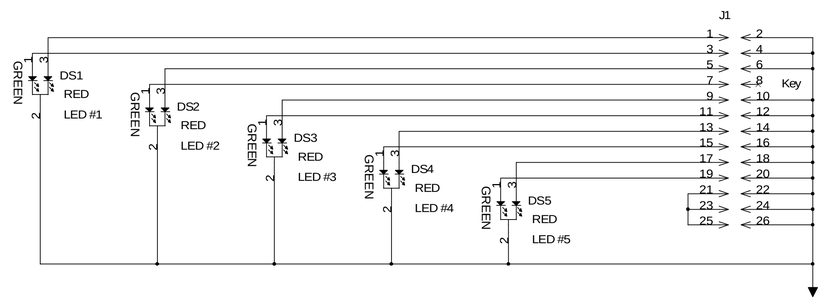

APV	ADC Telecommunications	REV	ECO	DATE	APV
DATE	THIS PRINT IS THE PROPERTY OF ADC, IT SHALL NOT BE COPIED WITHOUT PERMISSION	TITLE SCH., BWA 2000 FRONT PANEL BD. {1113713}			
ECO	MATERIAL -----	DWN PWN 6/9/00	DWG. NO. 1113710		REV A0
REV	FINISH -----	CHK REH 6/9/00			
		REL REH 6/9/00	D	SCALE - - -	SHEET 1 OF 1

Power Amp #1 Interconnect

J151

1	PA_Frw_Pwr_S1
2	PA_BiasVdc_S1
3	
4	PA_Interlock_S1
5	PA_PS_Good_S1
6	PA_PS_Enable_S1
7	PA_Oper_Rqst_S1
8	PA_Output_Stat_S1
9	PA_Temp_Stat_S1

Power Amp #2 Interconnect

J152

1	PA_Frw_Pwr_S2
2	PA_BiasVdc_S2
3	
4	PA_Interlock_S2
5	PA_PS_Good_S2
6	PA_PS_Enable_S2
7	PA_Oper_Rqst_S2
8	PA_Output_Stat_S2
9	PA_Temp_Stat_S2

Power Amp #3 Interconnect

J153

1	PA_Frw_Pwr_S3
2	PA_BiasVdc_S3
3	
4	PA_Interlock_S3
5	PA_PS_Good_S3
6	PA_PS_Enable_S3
7	PA_Oper_Rqst_S3
8	PA_Output_Stat_S3
9	PA_Temp_Stat_S3

Power Amp #4 Interconnect

J154

1	PA_Frw_Pwr_S4
2	PA_BiasVdc_S4
3	
4	PA_Interlock_S4
5	PA_PS_Good_S4
6	PA_PS_Enable_S4
7	PA_Oper_Rqst_S4
8	PA_Output_Stat_S4
9	PA_Temp_Stat_S4

Power Amp #5 Interconnect

J155

1	PA_Frw_Pwr_S5
2	PA_BiasVdc_S5
3	
4	PA_Interlock_S5
5	PA_PS_Good_S5
6	PA_PS_Enable_S5
7	PA_Oper_Rqst_S5
8	PA_Output_Stat_S5
9	PA_Temp_Stat_S5

Power Supply Interconnect

J156

1	System_PS_Stat_1
2	
3	System_PS_Stat_2
4	
5	PS1_LoadE
6	
7	PS2_LoadE
8	
9	PS3_LoadE

PA_Frw_Pwr_S[1-5]

Circuit Description:

This board routes signals from the power amplifiers and power supplies for use in different parts of the system.
J1 through J8 convert signals from floating connectors of the power amp/power suppl y module into ribbon cable connectors J11 through J13.

Signal lines from the floating connectors of the power amplifiers are combined for input/output through J1, J2, J3, J4, and J5. J1 is the interconnect to power amplifier #1.
J2 through J4 are for power amplifiers #2 through #4. J5 is the interconnect to power amplifi er #5 which is the back up PA of the system.

Power supply status lines from floating connectors are combined on terminal b locks then routed to J8.
From J8 the signals are set to the bandpass filt er module through J12.
From the bandpass filter module these signals are sent to the sy stem control module.

J11 is used to transfer the forward power voltage signals from the power amplifiers to the R F signal processing module.
These signals are used by the associated upconverter to ALC the forward power level.

J12 and J13 are used to transfer the forward and reflected power voltages as measured in the b andpass filter to the system control module.
These measurements are reported to the customer through SCADA and the downstr eam control card display messages.
Control and monitoring lines of each PA by the system control module are channeled through J13.

Power Amp / Power Supply Back plane to Signal Processing Back plane

PA_Frw_Pwr_S1	J150-1
	J150-2
	J150-3
PA_Frw_Pwr_S2	J150-4
	J150-5
	J150-6
PA_Frw_Pwr_S3	J150-7
	J150-8
	J150-9
PA_Frw_Pwr_S4	J150-10
	J150-11
	J150-12
PA_Frw_Pwr_S5	J150-13
	J150-14
	J150-15

Power Amp / Power Supply Back plane to Bandpass Filter Back plane

BPF_RFL_Pwr_S1	J158-1
	J158-2
BPF_Fwr_Pwr_S1	J158-3
	J158-4
BPF_RFL_Pwr_S2	J158-5
	J158-6
BPF_Fwr_Pwr_S2	J158-7
	J158-8
BPF_RFL_Pwr_S3	J158-9
	J158-10
BPF_Fwr_Pwr_S3	J158-11
	J158-12
BPF_RFL_Pwr_S4	J158-13
	J158-14
BPF_Fwr_Pwr_S4	J158-15
	J158-16
DS_RFL_Pwr	J158-17
	J158-18
DS_FRW_Pwr	J158-19
	J158-20
	J158-21
	J158-22
	J158-23
	J158-24
System_PS_Stat_1	J158-25
	J158-26
System_PS_Stat_2	J158-27
	J158-28
PS1_LoadE	J158-29
	J158-30
PS2_LoadE	J158-31
	J158-32
PS3_LoadE	J158-33
	J158-34

Power Amp / Power Supply Back plane to Control Back plane

PA_Interlock_S1	J157-1
PA_PS_Good_S1	J157-2
PA_PS_Enable_S1	J157-3
PA_Oper_Rqst_S1	J157-4
PA_Output_Stat_S1	J157-5
PA_Temp_Stat_S1	J157-6
	J157-7
PA_Interlock_S2	J157-8
PA_PS_Good_S2	J157-9
PA_PS_Enable_S2	J157-10
PA_Oper_Rqst_S2	J157-11
PA_Output_Stat_S2	J157-12
PA_Temp_Stat_S2	J157-13
	J157-14
PA_Interlock_S3	J157-15
PA_PS_Good_S3	J157-16
PA_PS_Enable_S3	J157-17
PA_Oper_Rqst_S3	J157-18
PA_Output_Stat_S3	J157-19
PA_Temp_Stat_S3	J157-20
	J157-21
PA_Interlock_S4	J157-22
PA_PS_Good_S4	J157-23
PA_PS_Enable_S4	J157-24
PA_Oper_Rqst_S4	J157-25
PA_Output_Stat_S4	J157-26
PA_Temp_Stat_S4	J157-27
	J157-28
PA_Interlock_S5	J157-29
PA_PS_Good_S5	J157-30
PA_PS_Enable_S5	J157-31
PA_Oper_Rqst_S5	J157-32
PA_Output_Stat_S5	J157-33
PA_Temp_Stat_S5	J157-34
	J157-35
BPF_Fwr_Pwr_S1	J157-36
BPF_RFL_Pwr_S1	J157-37
PA_BiasVdc_S1	J157-38
BPF_Fwr_Pwr_S2	J157-39
BPF_RFL_Pwr_S2	J157-40
PA_BiasVdc_S2	J157-41
BPF_Fwr_Pwr_S3	J157-42
BPF_RFL_Pwr_S3	J157-43
PA_BiasVdc_S3	J157-44
BPF_Fwr_Pwr_S4	J157-45
BPF_RFL_Pwr_S4	J157-46
PA_BiasVdc_S4	J157-47
DS_FRW_Pwr	J157-48
DS_RFL_Pwr	J157-49
PA_BiasVdc_S5	J157-50

1-102154-0

CHANGE J1 TO J151, J2 TO J152, J3 TO J153, J4 TO J154, J5 TO J155, J8 TO J156, J11 TO J150, J12 TO J158, AND J13 TO J157.

REV	ECO	DATE	APV
B0	20084525	03/12/01	REH

ADC Telecommunications

THIS PRINT IS THE PROPERTY OF ADC, IT SHALL NOT BE COPIED WITHOUT PERMISSION

MATERIAL -----

FINISH -----

DWN	PWN	7-24-00	
CHK	REH	8-15-00	
REL	REH	8-15-00	

TITLE SCH, BTS PHASE I PWR SUP & PWR AMP BACK PLANE (1121675)

DWG. NO. 1121681 REV B0

D SCALE --- SHEET 1 OF 1