Turning Mechanism

8 Two versions of turning mechanism are used:

(1) Low speed (CAE-A42), which rotates at 25 rpm.

(2) High speed (CAE-A41), which rotates at 40 rpm.

9 The two versions of turning mechanism use different motors.

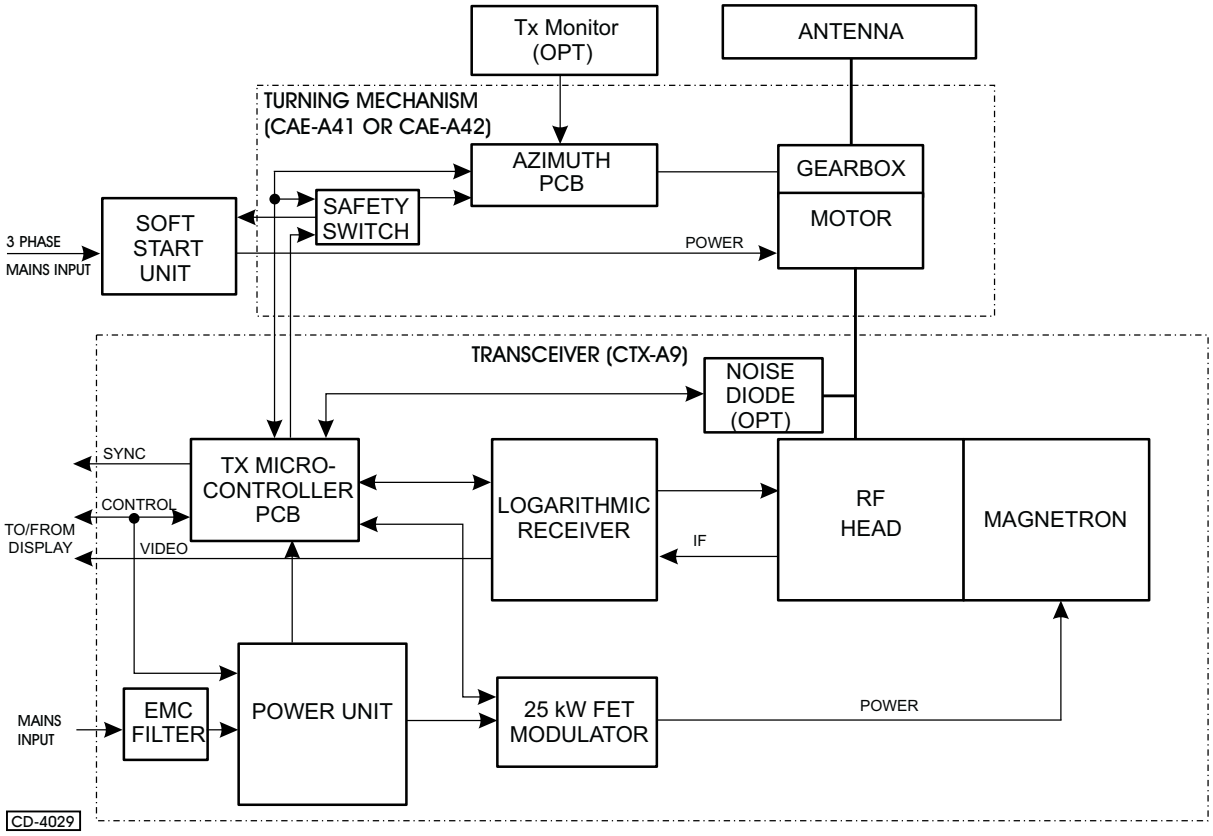

Figure 1 - System Block Diagram