Block Diagram
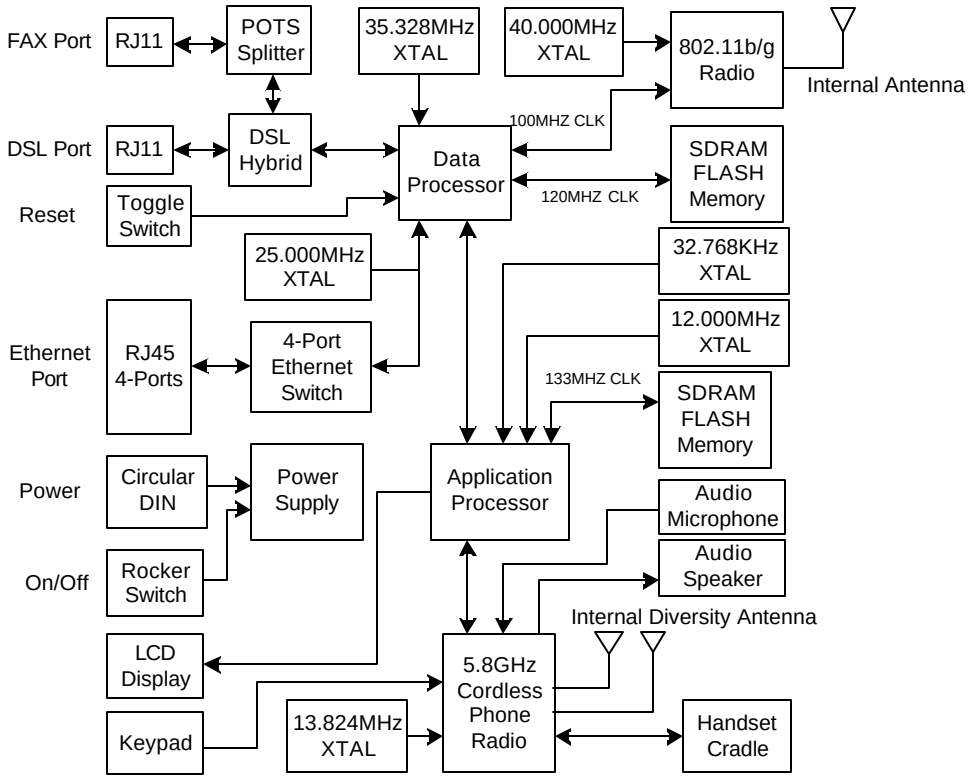
Base and Handset