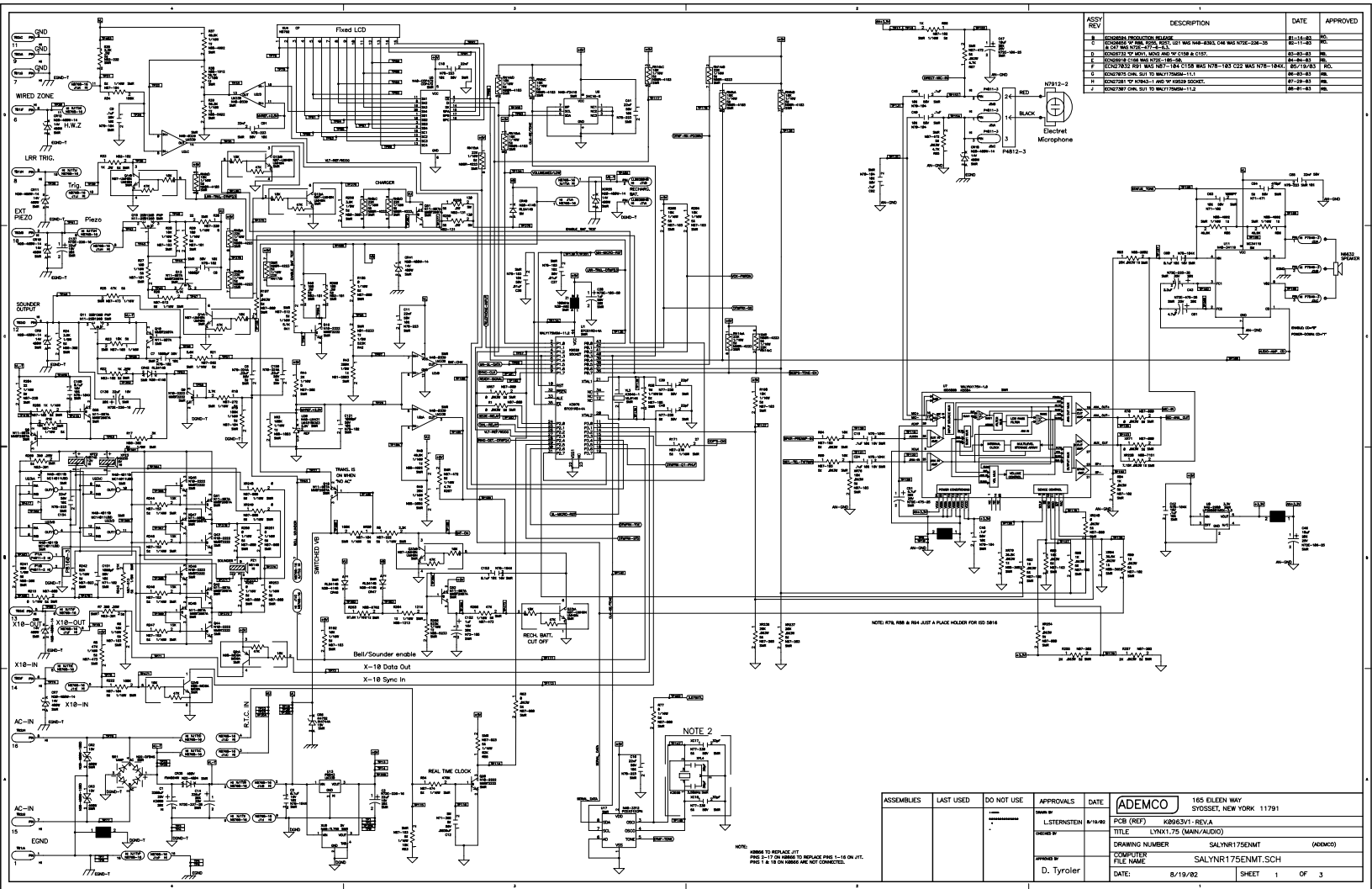

ASSY REV	DESCRIPTION	DATE	APPROVED
B	ECN02684 PRODUCTION RELEASE	01-14-03	RCL
C	ECN02805A "F" 888, 2GHz, RCOT, U21 WAS W48-6303, C46 WAS N72E-226-35 & C47 WAS N72E-477-6-SJL.	02-11-03	RCL
D	ECN02733 "F" MOV1, MOV2 AND "K" C158 & C157.	03-03-03	RBL
E	ECN02918 C158 WAS N72E-185-5R.	04-04-03	RBL
F	ECN27832 R91 WAS N87-184 C158 WAS N78-183 C22 WAS N78-184X.	05/19/03	RCL
G	ECN27875 CHN. SUT TO WALYT25M5N-11.1	06-03-03	RBL
H	ECN27281 "F" K2043-1 AND "K" K2523 SOCKET.	07-29-03	RBL
J	ECN27387 CHN. SUT TO WALYT25M5N-11.2	08-01-03	RBL

ASSEMBLIES	LAST USED	DO NOT USE	APPROVALS	DATE
			DRAWN BY L.STERNSTEIN	8/19/02
			CHECKED BY	
			APPROVED BY D. Tyroler	

ADEMCO
165 EILEEN WAY
SYOSSET, NEW YORK 11791

PCB (REF) K8963V1-REV.A
TITLE LYNX1.75 (MAIN/AUDIO)
DRAWING NUMBER SALYNR175ENMT (ADEMCO)
COMPUTER FILE NAME SALYNR175ENMT.SCH
DATE: 8/19/02 SHEET 1 OF 3

ASSY REV	DESCRIPTION	DATE	APPROVED
J	SEE SHEET 1 OF 3.	08-01-03	RB.

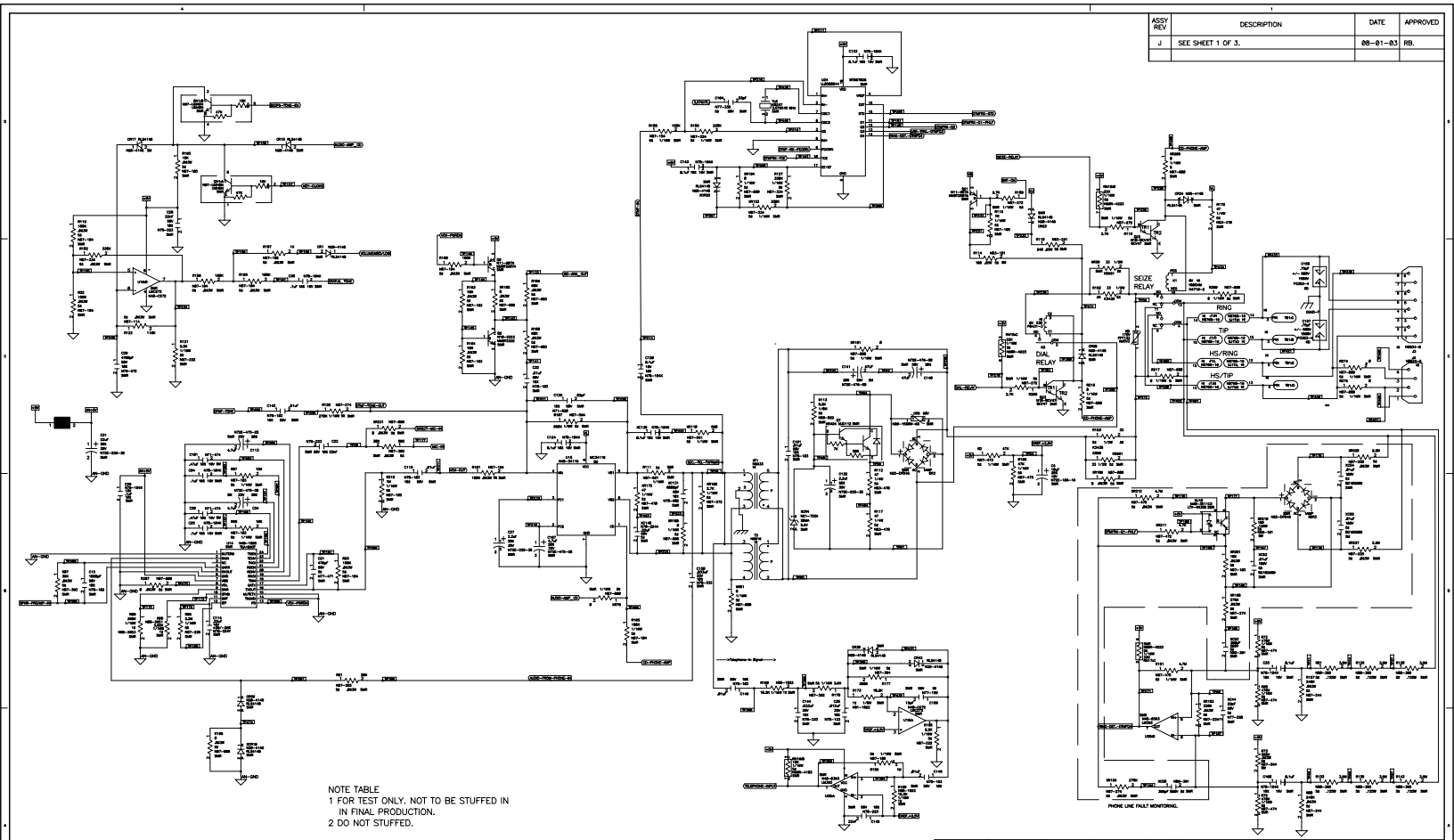

NOTE TABLE
1 FOR TEST ONLY. NOT TO BE STUFFED IN IN FINAL PRODUCTION.
2 DO NOT STUFFED.

ASSEMBLIES	LAST USED	DO NOT USE	APPROVALS	DATE
SA	C TB CR U FL W L XL Q Z R TP SW		DRAWN BY L.STERNSTEIN	8/19/02
			CHECKED BY	
			APPROVED BY D. Tyroler	

ADEMCO 165 EILEEN WAY SYOSSET, NEW YORK 11791

PCB (REF) K0963V1 REV.A

TITLE LYNX1.75 (DIALER/NEW VOX)

DRAWING NUMBER SALYNR175ENMT (ADEMCO)

COMPUTER FILE NAME SALYNR175ENMT.SCH

DATE: 8/19/02 SHEET 2 OF 3

ASSY REV	DESCRIPTION	DATE	APPROVED
J	SEE SHEET 1 OF 3.	08-01-03	RB.

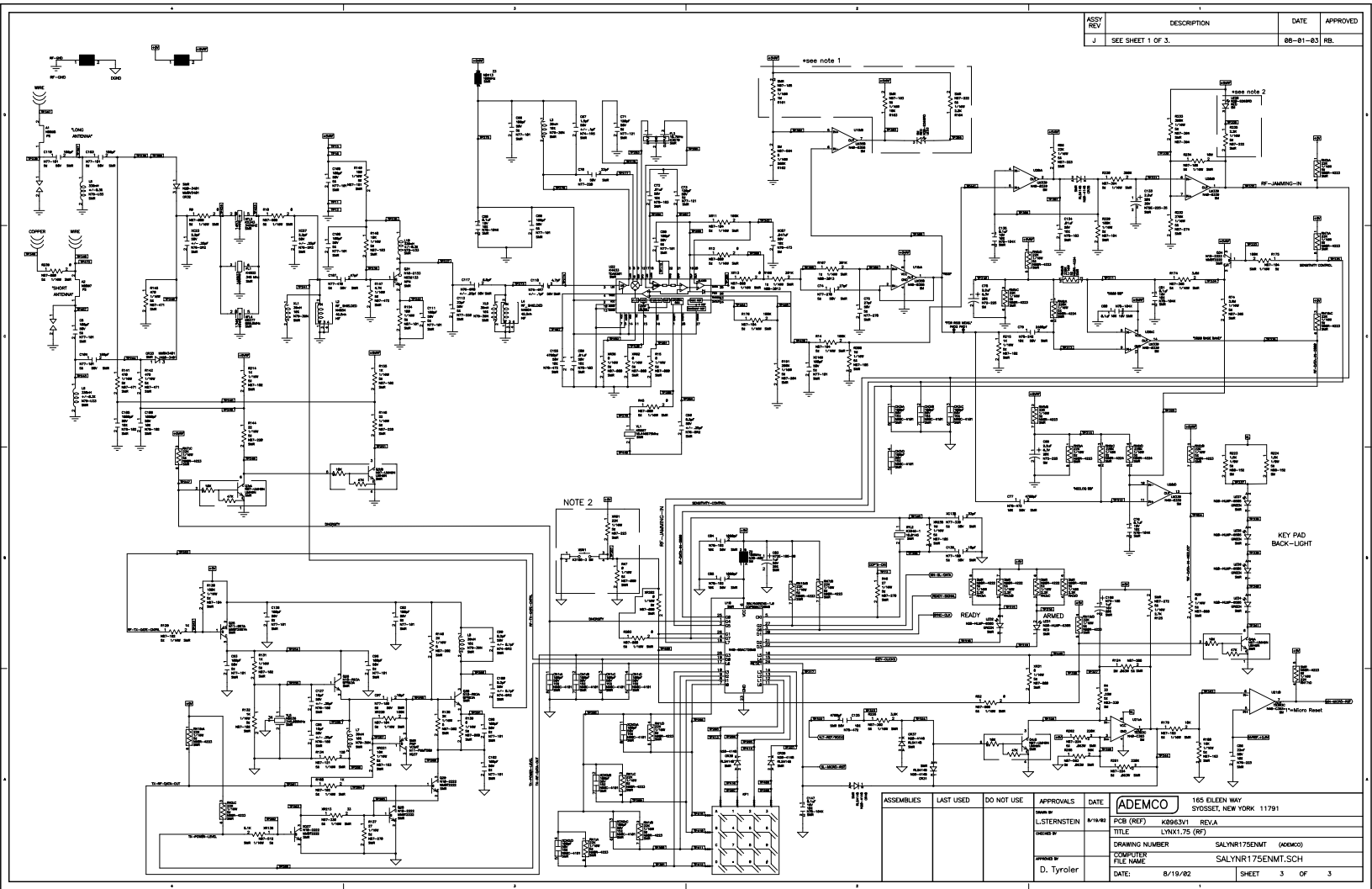

ASSEMBLIES	LAST USED	DO NOT USE

APPROVALS	DATE
DRAWN BY L.STERNSTEIN	8/19/02
CHECKED BY	
APPROVED BY D. Tyroler	

ADEMCO
165 EILEEN WAY
SYOSSET, NEW YORK 11791

PCB (REF)	K8963V1 REV.A
TITLE	LYNX1.75 (RF)
DRAWING NUMBER	SALYNR175ENMT (ADEMCO)
COMPUTER FILE NAME	SALYNR175ENMT.SCH
DATE: 8/19/02	SHEET 3 OF 3