REV	DESCRIPTION	DATE	APPROVED
7	PROTOTYPE RELEASE		

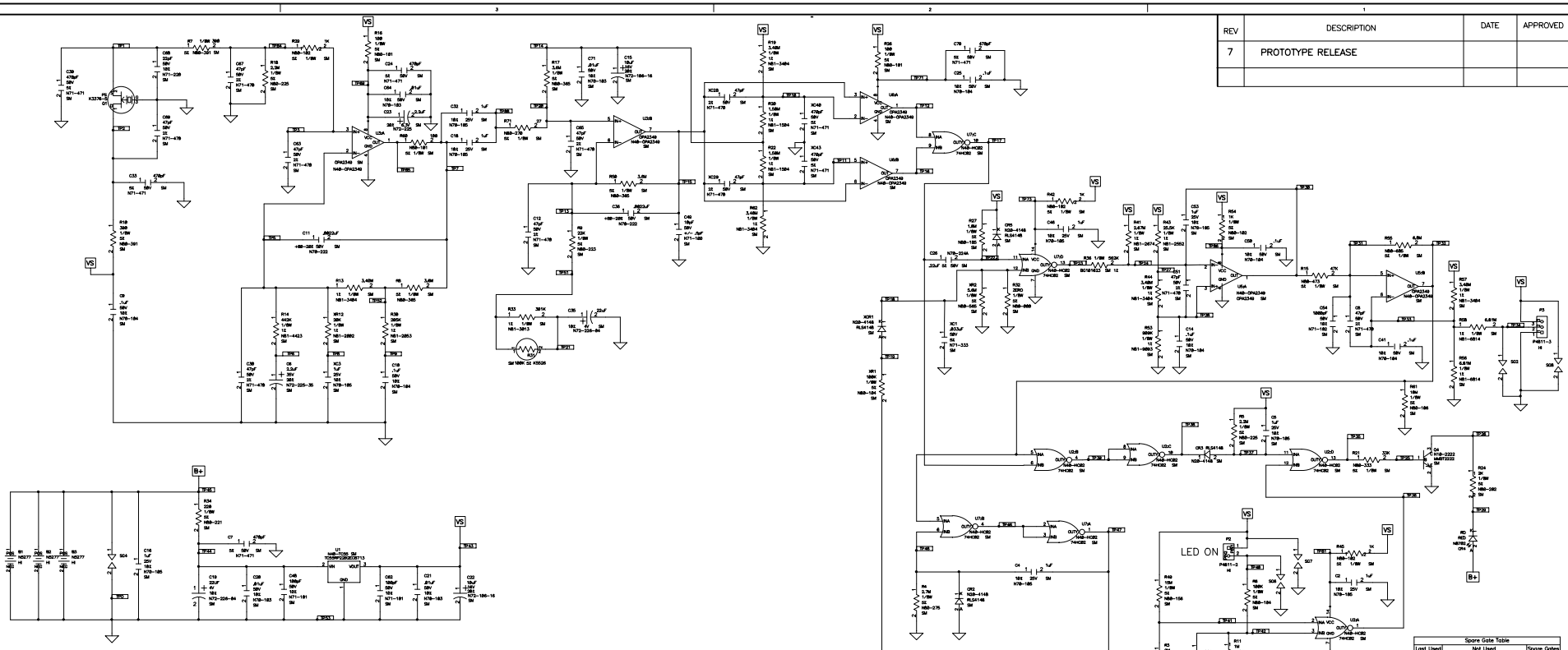

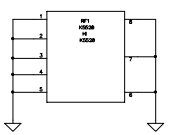

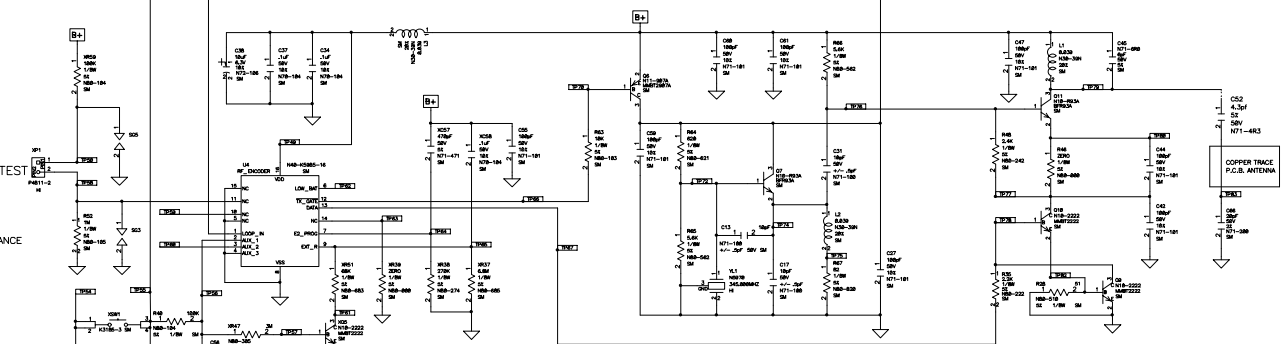

NOTE: CAPS SHALL BE DIRECTLY CONNECTED TO POWER AND GROUND PINS ON IC WITH MINIMAL LEAD LENGTH, LOWEST CAPACITANCE VALUE CLOSEST TO IC.

Spare Gate Table		
Last Used	Not Used	Spare Gates
S3		
C71	C1, C3, C28, C29, C48, C43, C52, C57, C58	
CR5	CR1	
DATE1		
FID6		
H5		
L3		
P3	P1	
PCB1		
Q11	Q2, Q3, Q5, Q8	
R71	R1, R2, R12, R25, R37, R38, R39, R47, R51, R59, R68, R69, R70	
RF1		
SQ8		
SW2	SW1	
TP88	TP4, TP87	
TP0		
U7		
XC58	XC2, XC4, XC5, XC6, XC7, XC8, XC9, XC18, XC11, XC12, XC13, XC14, XC15, XC16, XC17, XC18, XC19, XC20, XC21, XC22, XC23, XC24, XC25, XC26, XC27, XC30, XC31, XC32, XC33, XC34, XC35, XC36, XC37, XC38, XC39, XC41, XC42, XC44, XC45, XC46, XC47, XC48, XC49, XC50, XC51, XC52, XC53, XC54, XC55, XC56	
XCR1		
XF1		
XO5	XO1, XO2, XO3, XO4	
XR59	XR3, XR4, XR5, XR6, XR7, XR8, XR9, XR10, XR11, XR13, XR14, XR15, XR16, XR17, XR18, XR19, XR20, XR21, XR22, XR23, XR24, XR26, XR27, XR28, XR29, XR30, XR31, XR32, XR33, XR34, XR35, XR36, XR40, XR41, XR42, XR43, XR44, XR45, XR46, XR48, XR49, XR50, XR52, XR53, XR54, XR55, XR56, XR57, XR58	
XSW1		
YL1		

	LAST USED		DO NOT USE	APPROVALS	DATE	ADEMCO 165 EILEEN WAY SYOSSET, NEW YORK 11791	
SA	C	TB	.....	DRAWN BY G.MANCUSO	07-01-02	PCB (REF)	K5583 REV. 7
	CR	U	.....	CHECKED BY		TITLE	5894 PET IMMUNE WIRELESS PIR
	FL	W	.....			DRAWING NUMBER	SA5894.SCH
	L	XL	.	APPROVED BY		COMPUTER FILE NAME	SA5894.SCH
	Q	Z				DATE: 07-01-02	SHEET 1 OF 1
	R	TP					
	SW						