ASSY REV	DESCRIPTION	DATE	APPROVED
D	ECN20043 CHN. CR1 TO N22-4004.	07-18-01	RO.
E	ECN24437 CHN. U1 TO N5421-1S.	06-18-02	RB.
F	ECN26729 "A" ESO5801.	02-28-03	RB.
G	ECN28217 CHN. N5277 TO N5277V1.	06-08-04	RO.
H	ECN28427 N80-104 CHN. TO N80-104LF.	03-28-05	RB.
J	ECN28425 N80-820 CHN. TO N80-820LF.		
K	ECN28421 N80-152 CHN. TO N80-152LF.		
L	ECN29418 CHN. B1 TO N5277V1LF.	06-14-05	RB.

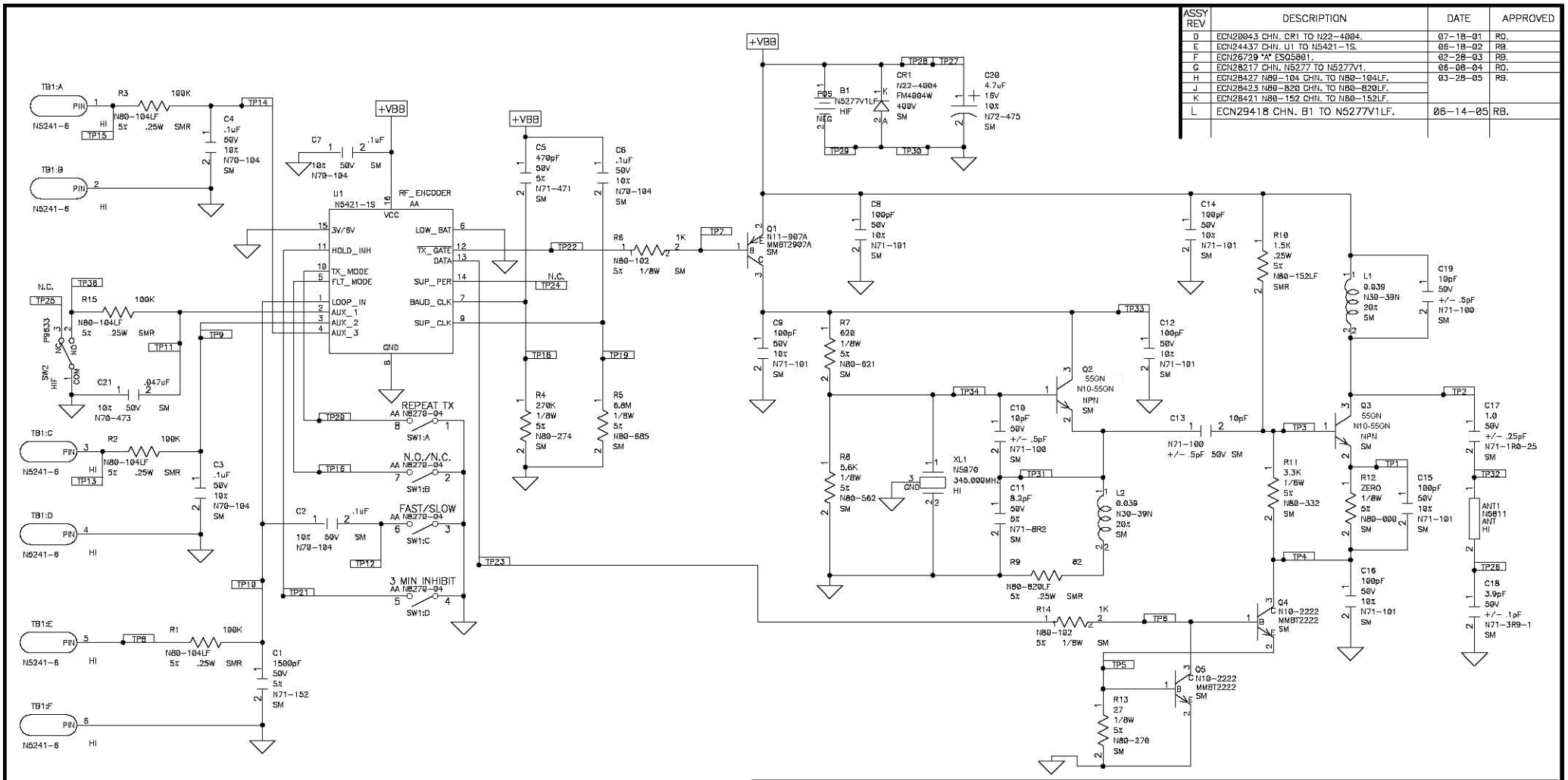

DIP SWITCH SETTINGS

SWITCH	ON	OFF
1	REPEATING TRANSMISSIONS ONCE EVERY 4 SECONDS	ONE TRANSMISSION PER CHANGE OF STATE OF LOOP INPUT
2	LOOP INPUT RESPONSE IS FOR NORMALLY OPEN CONTACT	LOOP INPUT RESPONSE IS FOR NORMALLY CLOSED CONTACT
3	SLOW LOOP INPUT RESPONSE	FAST LOOP INPUT RESPONSE
4	TRANSMISSION INHIBIT FOR 3 MINUTES FOLLOWING RESTORE TRANSMISSION	NO TRANSMISSION INHIBIT

APPROVALS	DATE
PROJECT ENG.	
ELECTRICAL ENG.	
MFG. ENG.	
IN CIRCUIT TEST ENGR.	
FUNCTIONAL TEST ENGR.	
CREATED BY:	

Honeywell
165 EILEEN WAY
SYOSSET, NEW YORK 11791

PCB (REF)	N5809 REV.D
TITLE	SCHEMATIC MULTI-POINT TX
DRAWING NUMBER	SA5817
COMPUTER FILE NAME	SA5817
DATE: 2-13-91	SHEET 1 OF 1