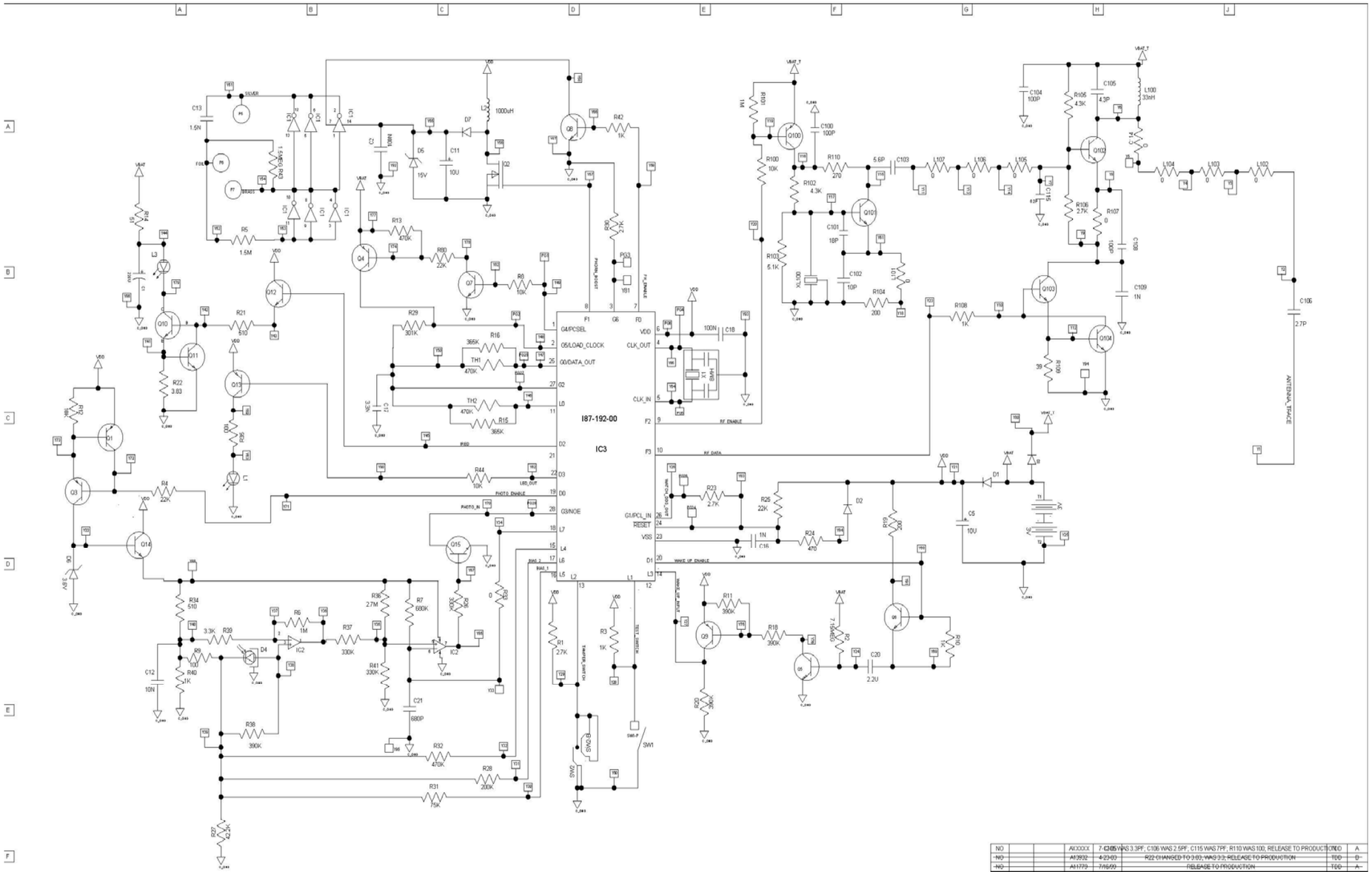
I87-192-00
IC3
G4/PCSEL
G5/LOAD_CLOCK
G0/DATA_OUT
VDD
CLK_OUT
CLK_IN
RF ENABLE
RF DATA
G1/PCL_IN
RESET
VSS
WAKE UP ENABLE
G3/NOE
PHOTO ENABLE
PHOTO_IN
LED_OUT
IRED
ANTENNA_TRACE
SYSTEM SENSOR
3825 Ohio Avenue
St. Charles, Illinois 60174
FAMILY
DO NOT SCALE
5808LST
C37-0576-110
1 : 1
DT
8/19/08
THIS PRINT AND INFORMATION THEREIN ARE PROPRIETARY TO SYSTEM SENSOR AND SHALL NOT BE USED IN WHOLE OR IN PART WITHOUT THEIR EXPRESSED CONSENT
UNLESS OTHERWISE SPECIFIED, DIMENSIONS AND TOLERANCES ARE IN INCHES
A0.XXXX 7-12-05 C105 WAS 3.3PF; C106 WAS 2.5PF; C115 WAS 7PF; R110 WAS 100; RELEASE TO PRODUCTION TDD A
~~A1.3932 4-23-03 R22 CHANGED TO 3.03; WAS 3.3; RELEASE TO PRODUCTION TDD B~~
~~A1.1779 7/16/99 RELEASE TO PRODUCTION TDD A~~